EYMAQ

COMPOSIT

WEAR-RESISTANT HOSES FOR
MINING AND MINERAL PROCESSING

EYMAQ

COMPOSIT

ENDLESS POSSIBILITIES

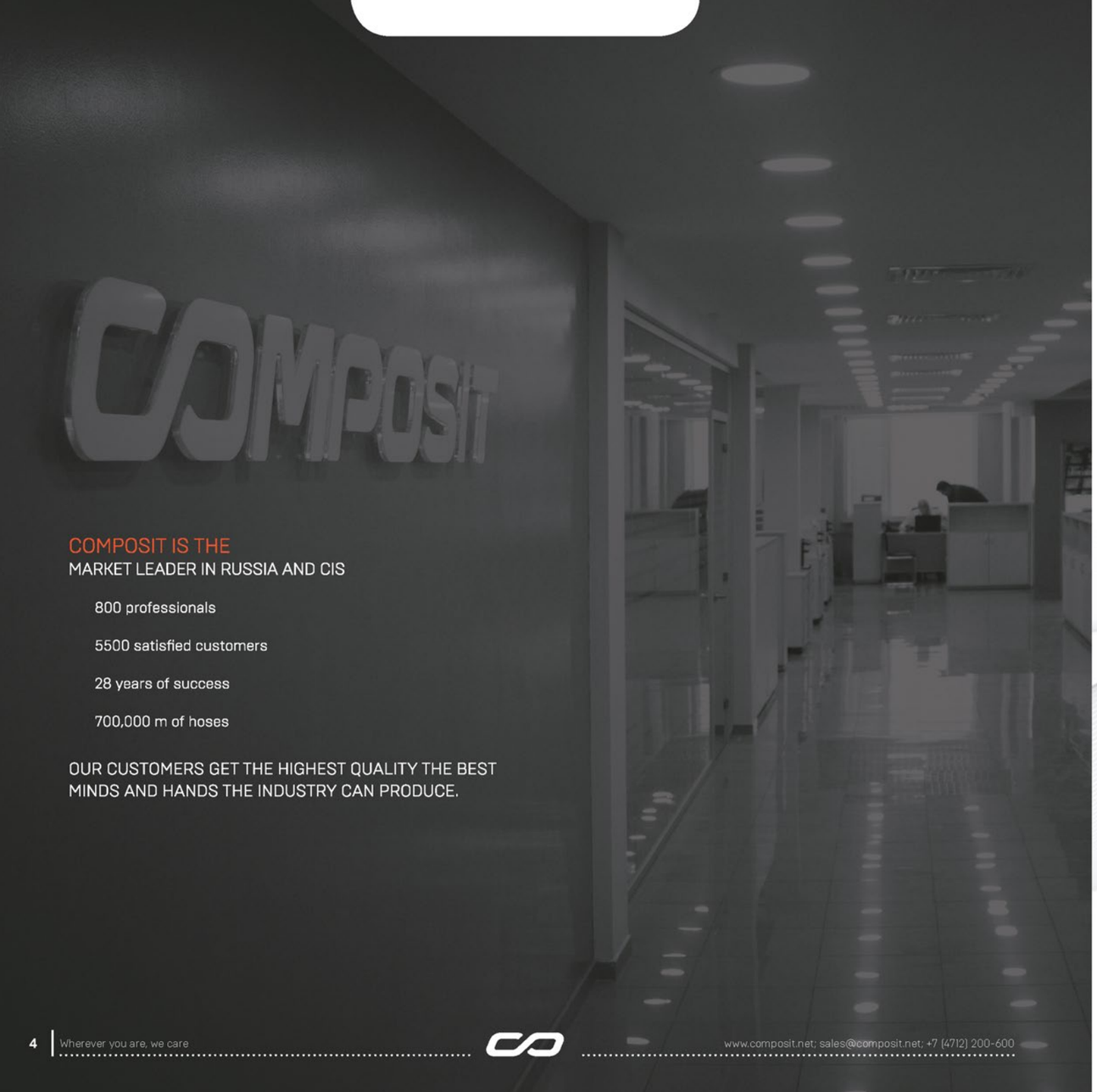

COMPOSIT IS THE
MARKET LEADER IN RUSSIA AND CIS

- 800 professionals
- 5500 satisfied customers
- 28 years of success
- 700,000 m of hoses

OUR CUSTOMERS GET THE HIGHEST QUALITY THE BEST MINDS AND HANDS THE INDUSTRY CAN PRODUCE.

www.composit.net; sales@composit.net; +7 (4712) 200-600

COMPOSIT

FUTURE TECHNOLOGIES TODAY

MAJOR MANUFACTURER
OF SLURRY PIPELINES FOR HYDRAULIC AND CONVENTIONAL MINING AND MINERAL PROCESSING

Composit LLC has been in business since 1992. Its primary focus has been research, development, and manufacture of wear-resistant rubber hoses.

Initially, the Company made tracks for snowmobiles and other machinery, expanding its product offering substantially over time.

As of today, our hoses are being successfully used in dredging, conventional mining, and mineral processing sectors.

> Limitless manufacturing capabilities **ENSURE CONTINUOUS ADVANCEMENT** of our technology

49 Solovinaya street, Kursk 305022, Russia

FLEX HOSE WITH COUPLINGS

HIGH ABRASION RESISTANCE ASSURES SUITABILITY FOR USE IN PNEUMATIC AND HYDRAULIC TRANSPORTATION APPLICATIONS.

Thanks to the special design of FLEX HOSE WITH COUPLINGS, our rubber hosing is multi-purpose and suitable for installation even in areas with problematic access. The integrated solution provided by the FLEX HOSE WITH COUPLINGS helps to achieve maximum cost effectiveness and process efficiency.

The hosing meets all the state-of-the-art equipment requirements for use at combination mining and beneficiation facilities, gold refining plants, and in other sectors. Hoses are connected together using aluminum couplings. The seal is maintained by a rubber-lined steel sealing ring.

EXAMPLE OF DESIGNATION FOR FLEXIBLE RUBBER HOSE WITH INSIDE DIAMETER OF 200 MM TO BE USED IN HYDRAULIC CONVEYANCE APPLICATIONS OF STANDARD CONSTRUCTION WHEN TRANSPORTING MATERIAL WITH PARTICLE SIZE OF BETWEEN + 2.0 TO +10.0 MM

FH-200.1.0.2
1 2 345

1. **PRODUCT ABBREVATION**
   Abbreviation **FH** is applied for all **Composit** flexible hoses with couplings.
2. **HOSE DIAMETER**
   This part of the designation refers to the hose inside diameter.
3. **METHOD OF CONVEYANCE:**
   1 – hydraulic;
   2 – pneumatic;
4. **CONSTRUCTION:**
   0 – standard;
   1 – special;
5. **ID RUBBER LINER TYPE**
   The inside wear-resistant volume is a slurry line's most important component. The type of rubber used to line the inside diameter of a hose defines a line's abrasion resistance and consequently, assures trouble-free operation of the entire section. Based on operational history of slurry hose systems, we offer two standard versions of the internal wear-resistant lining, depending on the particle size of the transported material. In the designation, these are written as 1 and 2.
   1: for slurries with a particle size of up to 2.0 mm.
   2: for slurries with a particle size of up to 10 mm.

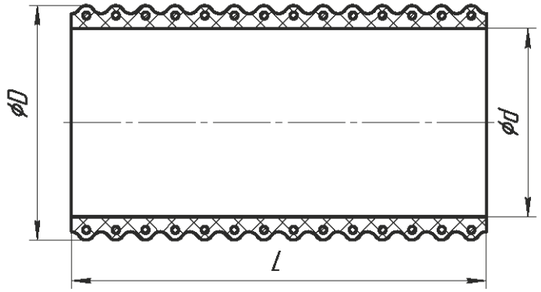

FH SLURRY HOSE

BASIC SPECIFICATIONS

Designation	Inside Diameter d		Outside Diameter D		Standard Length L		Wear-Resistant Layer Thickness		Working Pressure		Vacuum		Min. Bending Radius		Weight of One Section	
	mm	inch	mm	inch	mm	ft	mm	inch	MPa	psi	MPa	psi	mm	ft	kg	lb
FH-050.0.0.0	50	2	85	3 1/3	5000	16,4	5	1/5	1,0	150	-0,08	-12	150	0,5	24	53
FH-065.0.0.0	65	2 5/9	102	4	5000	16,4	5	1/5	1,0	150	-0,08	-12	200	0,6	31	68
FH-076.0.0.0	76	3	113	4 4/9	10000	33	6	1/4	1,0	150	-0,08	-12	250	0,8	72	159
FH-102.0.0.0	102	4	138	5 3/7	10000	33	6	1/4	1,0	150	-0,08	-12	310	0,9	100	220
FH-114.0.0.0	114	4 1/2	152	6	10000	33	6	1/4	1,0	150	-0,08	-12	350	1,1	104	229
FH-133.0.0.0	133	5 1/4	170	6 5/7	10000	33	6	1/4	1,0	150	-0,08	-12	530	1,5	111	245
FH-152.0.0.0	152	6	191	7 1/2	10000	33	6	1/4	1,0	150	-0,08	-12	650	2,1	116	256
FH-159.0.0.0	159	6 1/4	198	7 4/5	10000	33	6	1/4	1,0	150	-0,08	-12	650	1,8	122	269
FH-170.0.0.0	170	6 5/7	211	8 2/7	10000	33	7	2/7	1,0	150	-0,08	-12	850	2,8	138	304
FH-200.0.0.0	200	7 7/8	245	9 5/8	10000	33	7	2/7	1,0	150	-0,08	-12	1200	3,4	207	456
FH-219.0.0.0	219	8 5/8	265	10 3/7	10000	33	7	2/7	1,0	150	-0,08	-12	1400	4,6	224	494
FH-245.0.0.0	245	9 5/8	294	11 4/7	10000	33	7	2/7	1,0	150	-0,08	-12	1470	4,1	284	626
FH-273.0.0.0	273	10 3/4	322	12 2/3	10000	33	7	2/7	1,0	150	-0,08	-12	1700	5,6	317	699
FH-300.0.0.0	300	11 4/5	349	13 3/4	10000	33	8	1/3	1,0	150	-0,08	-12	1800	5,1	380	838
FH-325.0.0.0	325	12 4/5	376	14 4/5	10000	33	8	1/3	1,0	150	-0,08	-12	1950	6,4	431	950
FH-351.0.0.0	351	13 5/6	417	16 3/7	10000	33	8	1/3	1,0	150	-0,08	-12	2100	5,9	532	1173
FH-377.0.0.0	377	14 5/6	432	17	10000	33	8	1/3	1,0	150	-0,08	-12	2300	7,5	570	1257
FH-402.0.0.0	402	15 5/6	470	18 1/2	10000	33	12	5/16	1,0	150	-0,08	-12	2500	7,0	600	1323
FH-426.0.0.0	426	16 7/9	496	19 1/2	10000	33	12	1/2	0,8	120	-0,08	-11	2600	8,5	722	1592
FH-457.0.0.0	457	18	529	20 5/6	10000	33	13	1/2	0,8	120	-0,06	-9	2800	7,9	780	1720
FH-508.0.0.0	508	20	582	22 8/9	10000	33	14	5/9	0,8	120	-0,04	-6	3200	10,5	865	1907
FH-530.0.0.0	530	20 7/8	610	24	10000	33	17	2/3	0,8	120	-0,04	-6	3500	9,8	1050	2315
FH-610.0.0.0	610	24	686	27	10000	33	15	3/5	0,8	120	-0,03	-3,75	4100	13,5	1132	2496

PRODUCT CAN BE CUSTOMIZED ACCORDING TO CUSTOMER DRAWINGS AND SPECIFICATION, INCLUDING LARGER DIAMETERS AS REQUIRED FOR SPECIFIC OPERATING CONDITIONS

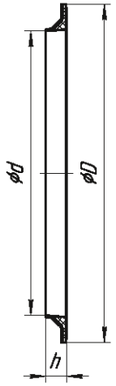

O-RING

DESIGNED TO BE USED AS A SEAL IN HOSE CONNECTIONS.

BASIC SPECIFICATIONS

Designation	Hose Inside Diameter		Ring Inside Diameter d		Ring Outside Diameter D		Ring Height h		Ring Weight	
	mm	inch	mm	inch	mm	inch	mm	inch	kg	lb
G050	50	2	43	1 5/7	92	3 5/8	19	3/4	0,08	0,2
G065	65	2 5/9	59	2 1/3	110	4 1/3	19	3/4	0,14	0,3
G076	76	3	70	2 3/4	125	4 8/9	20	7/9	0,16	0,4
G102	102	4	96	3 7/9	150	5 8/9	20	7/9	0,19	0,4
G114	114	4 1/2	108	4 1/4	170	6 5/7	24	1	0,38	0,8
G133	133	5 1/4	127	5	187	7 3/8	21	4/5	0,27	0,6
G152	152	6	146	5 3/4	205	8 1/9	25	1	0,67	1,5
G159	159	6 1/4	152	6	209	8 2/9	25	1	0,33	0,7
G170	170	6 5/7	163	6 3/7	225	8 6/7	25	1	0,36	0,8
G200	200	7 7/8	196	7 5/7	255	10	25	1	0,42	0,9
G219	219	8 5/8	212	8 1/3	280	11	26	1	0,8	1,8
G245	245	9 5/8	237	9 1/3	300	11 4/5	25	1	0,8	1,8
G273	273	10 3/4	267	10 1/2	325	12 4/5	25	1	0,89	2,0
G300	300	11 4/5	287	11 2/7	354	13 8/9	25	1	0,95	2,1
G325	325	12 4/5	313	12 1/3	389	15 1/3	26	1	1,15	2,5
G351	351	13 5/6	338	13 2/7	415	16 1/3	25	1	1,21	2,7
G377	377	14 5/6	370	14 4/7	440	17 1/3	26	1	1,5	3,3
G402	402	15 5/6	389	15 1/3	471	18 5/9	26	1	1,6	3,5
G426	426	16 7/9	417	16 3/7	500	19 2/3	26	1	1,8	4,0
G457	457	18	449	17 2/3	550	21 2/3	26	1	1,9	4,2
G508	508	20	499	19 2/3	600	23 5/8	30	1 1/7	2,2	4,9
G530	530	20 7/8	522	20 5/9	610	24	29	1 1/7	3	6,6
G610	610	24	604	23 7/9	700	27 5/9	27	1 1/9	2,2	4,9

PRODUCT CAN BE CUSTOMIZED ACCORDING TO CUSTOMER DRAWINGS AND SPECIFICATION, INCLUDING LARGER DIAMETERS AS REQUIRED FOR SPECIFIC OPERATING CONDITIONS

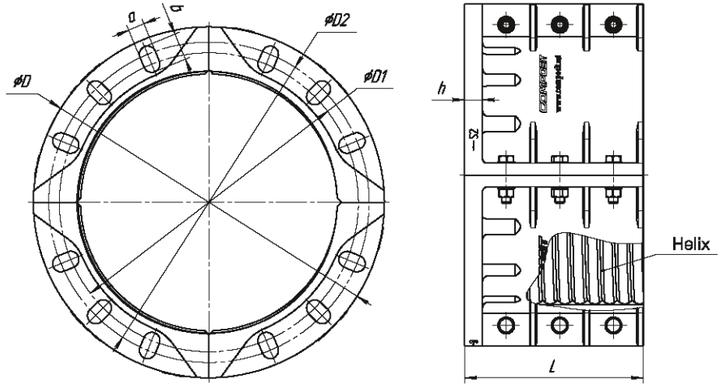

COUPLING

DESIGNED TO CONNECT CORRUGATED HOSES AND SYSTEM COMPONENTS FOR SLURRY TRANSPORTATION.

BASIC SPECIFICATIONS

Designation	Hose Diameter		Flange Outside Diameter D		Pitch Circle Diameter D1	D2	Coupling Height L	Flange Thickness h	Bolt Slot Dimensions axb	Number of Coupling Components	Number of Bolt Slots in Component	Number of Bolt Slots in Matching Flange	Coupling Weight W/O Fasteners		Working Pressure	
	mm	inch	mm	inch	mm	mm	mm	mm	mm	pcs	pcs	pcs	kg	lb	MPa	psi
C50	50	2	160	6 2/7	123	134	100	15	18x23,5	2	2	4	1,3	3,0	1,0	150
C65	65	2 5/9	185	7 2/7	145	150	120	20	18x20,5	2	2	4	2,4	5,3	1,0	150
C76	76	3	198	7 4/5	156	164	125	20	18x22	2	2	8	2,9	6,4	1,0	150
C102	102	4	220	8 2/3	180	190	125	20	18x23	2	3	8	3,3	7,2	1,0	150
C114	114	4 1/2	285	11 2/9	210	240	125	25	18x33	2	3	8	5,9	13,1	1,0	150
C133	133	5 1/4	290	11 3/7	210	240	150	25	18x33	2	3	8	5,7	12,6	1,0	150
C152	152	6	290	11 3/7	240	250	185	25	22x27	2	3	8	7,1	15,7	1,0	150
C159	159	6 1/4	290	11 3/7	240	250	185	25	22x27	2	3	8	6,2	13,6	1,0	150
C170	170	6 5/7	315	12 2/5	256	270	185	25	22x29	2	3	8	6,9	15,2	1,0	150
C200	200	7 7/8	340	13 3/8	287	303	185	25	22x30	2	4	8	6,6	14,6	1,0	150
C219	219	8 5/8	385	15 1/6	325	340	200	25	22x29,5	2	4	8	10,4	22,9	1,0	150
C245	245	9 5/8	405	16	350	360	200	25	22x27	2	5	12	11,3	24,8	1,0	150
C273	273	10 3/4	430	16 8/9	370	385	200	25	22x29,5	2	5	12	11,8	26,0	1,0	150
C300	300	11 4/5	476	18 3/4	400	430	210	25	22x37	2	5	12	13,6	30,0	1,0	150
C325	325	12 4/5	500	19 2/3	448	462	210	25	22x29	2	7	16	14,9	32,8	1,0	150
C351	351	13 5/6	530	20 7/8	455	490	300	30	22x39,5	4	3	16	25,5	56,1	1,0	150
C377	377	14 5/6	575	22 5/8	490	525	300	30	27x44,5	4	3	16	29,1	64,2	1,0	150
C402	402	15 5/6	600	23 5/8	515	550	300	30	27x44,5	4	3	16	29,8	65,7	1,0	150
C426	426	16 7/9	650	25 3/5	560	585	350	40	27x39,5	4	4	20	50,0	110,3	0,8	120
C457	457	18	690	27 1/6	600	635	375	40	27x44,5	4	4	20	58,0	127,9	0,8	120
C508	508	20	720	28 1/3	638	660	450	40	27x38	4	4	20	63,0	138,9	0,8	120
C530	530	20 7/8	810	31 8/9	700	730	480	50	30x45	4	4	20	109,0	240,2	0,8	120
C610	610	24	860	33 8/9	750	785	550	50	30x47,5	4	4	20	122,2	269,5	0,8	120

PRODUCT CAN BE CUSTOMIZED ACCORDING TO CUSTOMER DRAWINGS AND SPECIFICATION, INCLUDING LARGER DIAMETERS AS REQUIRED FOR SPECIFIC OPERATING CONDITIONS

FLANGED HOSE

FLANGED HOSES ARE MANUFACTURED WITH INSIDE DIAMETERS FROM 50 TO 1,200 MM AND DIFFERENT PITCH CIRCLE DIAMETER TO MEET THE REQUIREMENTS OF STATE-OF-THE-ART EQUIPMENT.

The special design assures a reliable and tight seal for trouble-free operation and maximum cost effectiveness.

The wear-resistant part of the flex hose is made of rubber based on natural or synthetic rubber, depending on the material to be conveyed. The thickness of the wear-resistant liner can be increased as needed based on customer request.

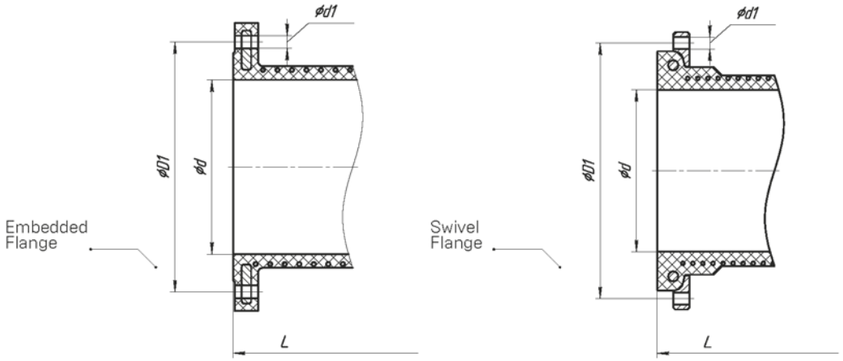

DESIGNATION EXAMPLE OF A FLANGED HOSE WITH A LENGTH OF 5 M AND AN INSIDE DIAMETER OF 50 MM WITH A CORD FABRIC BASE, REINFORCING WIRE, AND EMBEDDED FLANGES FOR CONVEYING ABRASIVE MATERIAL WITH PARTICLE SIZES OF UP TO 2.0 MM.

FHF-050.20.01.01.050
1 2 3 4 5 6

1. **PRODUCT ABBREVATION**

   FHF is used as the abbreviation for all Composit flexible flanged slurry hose.

2. **HOSE DIAMETER**

   This part of the designation refers to the hose inside diameter.

3. **HOSE CONSTRUCTION:**

   This part of designation refers to the design of the hose and has several possible values:

   «10»: rubberized fabric hose with a cord fabric base without reinforcing wire. The DIDx10 formula is used to compute the minimum bending radius for this hose. These hoses are incapable of withstanding a vacuum.

   «20»: rubberized fabric hose with a cord fabric base with reinforcing wire. The DIDx10 formula is used to compute the minimum bending radius for this hose. These hoses are capable of withstanding a vacuum.

4. **FLANGE CONNECTION TYPE:**

   We offer two standard flanged connections as shown in the hose markings. Flange interface dimensions can be customized as required upon customer request. A single hose may include two types of flanges for easy installation. Product designation includes the corresponding codes: 01, 02, 03.

   «01»: embedded flange

   «02»: swivel flange

   «03»: swivel and split flange on a single hose segment

5. **ID RUBBER LINER TYPE**

   The inside wear-resistant volume is a slurry line's most important component. The type of rubber used to line the inside diameter of a hose defines a line's abrasion resistance and consequently, assures trouble-free operation of the entire section. Based on past operational history of slurry hose systems, we offer two standard versions of the internal wear-resistant lining, depending on the particle size of the transported material. In the designation, these are written as 01 and 02.

   «01»: for slurries with a particle size of up to 2.0 mm.

   «02»: for slurries with a particle size of up to 10 mm.

6. **HOSE LENGTH**

   Hoses are manufactured in sections of standard length. However, custom lengths are also available. Length is represented by the last three digits of the hose designation and shown in decimeters.

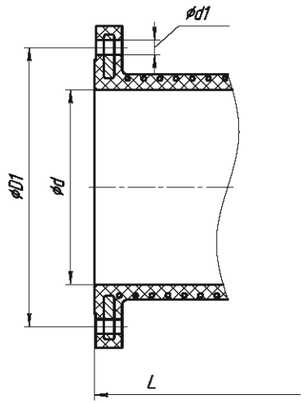

HOSE
WITH EMBEDDED FLANGES

BASIC SPECIFICATIONS

Designation	Inside Diameter d		Standard Length L		Wear-Resistant Layer Thickness		Working Pressure		Vacuum		Pitch Circle Diameter D1		Pitch Circle Diameter d1		n
	mm	inch	mm	ft	mm	inch	MPa	psi	MPa	psi	mm	inch	mm	inch	pcs
FHF-050.00.00.000	50	2	5000	16,4	5	1/5	1,0	150	-0,08	-12	125	4 8/9	18	5/7	4
FHF-065.00.00.000	65	2 5/9	5000	16,4	6	1/4	1,0	150	-0,08	-12	145	5 3/4	18	5/7	4
FHF-076.00.00.000	76	3	10000	33	6	1/4	1,0	150	-0,08	-12	160	6 2/7	18	5/7	8
FHF-102.00.00.000	102	4	10000	33	6	1/4	1,0	150	-0,08	-12	180	7 1/9	18	5/7	8
FHF-114.00.00.000	114	4 1/2	10000	33	6	1/4	1,0	150	-0,08	-12	240	9 4/9	18	5/7	8
FHF-133.00.00.000	133	5 1/4	10000	33	6	1/4	1,0	150	-0,08	-12	240	9 4/9	22	7/8	8
FHF-152.00.00.000	152	6	10000	33	6	1/4	1,0	150	-0,08	-12	240	9 4/9	22	7/8	8
FHF-159.00.00.000	159	6 1/4	10000	33	6	1/4	1,0	150	-0,08	-12	250	9 5/6	22	7/8	8
FHF-170.00.00.000	170	6 5/7	10000	33	7	2/7	1,0	150	-0,08	-12	270	10 5/8	22	7/8	8
FHF-200.00.00.000	200	7 7/8	10000	33	7	2/7	1,0	150	-0,08	-12	295	11 5/8	22	7/8	8
FHF-219.00.00.000	219	8 5/8	10000	33	7	2/7	1,0	150	-0,08	-12	325	12 4/5	22	7/8	8
FHF-245.00.00.000	245	9 5/8	10000	33	7	2/7	1,0	150	-0,08	-12	350	13 7/9	22	7/8	12
FHF-273.00.00.000	273	10 3/4	10000	33	7	2/7	1,0	150	-0,08	-12	375	14 3/4	22	7/8	12
FHF-300.00.00.000	300	11 4/5	10000	33	8	1/3	1,0	150	-0,08	-12	430	16 8/9	22	7/8	12
FHF-325.00.00.000	325	12 4/5	10000	33	8	1/3	1,0	150	-0,08	-12	450	17 5/7	22	7/8	16
FHF-351.00.00.000	351	13 5/6	10000	33	8	1/3	1,0	150	-0,08	-12	470	18 1/2	22	7/8	16
FHF-377.00.00.000	377	14 5/6	10000	33	8	1/3	1,0	150	-0,08	-12	515	20 2/7	26	1	16
FHF-402.00.00.000	402	15 5/6	10000	33	12	1/2	1,0	150	-0,08	-12	550	21 2/3	26	1	16
FHF-426.00.00.000	426	16 7/9	10000	33	12	1/2	1,0	150	-0,08	-11	585	23	26	1	20
FHF-457.00.00.000	457	18	10000	33	12	1/2	1,0	150	-0,06	-9	630	24 4/5	26	1	20
FHF-508.00.00.000	508	20	10000	33	12	1/2	1,0	150	-0,04	-6	660	26	26	1	20
FHF-530.00.00.000	530	20 7/8	10000	33	12	1/2	1,0	150	-0,04	-6	710	28	30	1 1/6	20
FHF-610.00.00.000	610	24	10000	33	15	3/5	1,0	150	-0,03	-3,75	760	29 8/9	30	1 1/6	20

PRODUCT CAN BE CUSTOMIZED ACCORDING TO CUSTOMER DRAWINGS AND SPECIFICATION, INCLUDING LARGER DIAMETERS AS REQUIRED FOR SPECIFIC OPERATING CONDITIONS

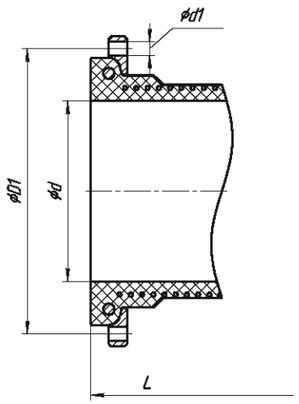

HOSE
WITH SWIVEL FLANGES

BASIC SPECIFICATIONS

Designation	Inside Diameter d		Standard Length L		Wear-Resistant Layer Thickness		Working Pressure		Vacuum		Pitch Circle Diameter D1		Pitch Circle Diameter d1		n
	mm	inch	mm	ft	mm	inch	MPa	psi	MPa	psi	mm	inch	mm	inch	pcs
FHF-050.00.00.000	50	2	5000	16,4	5	1/5	1,0	150	-0,08	-12	160	6 2/7	18	5/7	4
FHF-065.00.00.000	65	2 5/9	5000	16,4	6	1/4	1,0	150	-0,08	-12	180	7 1/9	18	5/7	4
FHF-076.00.00.000	76	3	10000	33	6	1/4	1,0	150	-0,08	-12	180	7 1/9	18	5/7	8
FHF-102.00.00.000	102	4	10000	33	6	1/4	1,0	150	-0,08	-12	210	8 1/4	18	5/7	8
FHF-114.00.00.000	114	4 1/2	10000	33	6	1/4	1,0	150	-0,08	-12	240	9 4/9	18	5/7	8
FHF-133.00.00.000	133	5 1/4	10000	33	6	1/4	1,0	150	-0,08	-12	250	9 5/6	22	7/8	8
FHF-152.00.00.000	152	6	10000	33	6	1/4	1,0	150	-0,08	-12	270	10 5/8	22	7/8	8
FHF-159.00.00.000	159	6 1/4	10000	33	6	1/4	1,0	150	-0,08	-12	275	10 5/6	22	7/8	8
FHF-170.00.00.000	170	6 5/7	10000	33	7	2/7	1,0	150	-0,08	-12	295	11 5/8	22	7/8	8
FHF-200.00.00.000	200	7 7/8	10000	33	7	2/7	1,0	150	-0,08	-12	325	12 4/5	22	7/8	8
FHF-219.00.00.000	219	8 5/8	10000	33	7	2/7	1,0	150	-0,08	-12	350	13 7/9	22	7/8	8
FHF-245.00.00.000	245	9 5/8	10000	33	7	2/7	1,0	150	-0,08	-12	375	14 3/4	22	7/8	12
FHF-273.00.00.000	273	10 3/4	10000	33	7	2/7	1,0	150	-0,08	-12	405	16	22	7/8	12
FHF-300.00.00.000	300	11 4/5	10000	33	8	1/3	1,0	150	-0,08	-12	450	17 5/7	22	7/8	12
FHF-325.00.00.000	325	12 4/5	10000	33	8	1/3	1,0	150	-0,08	-12	470	18 1/2	22	7/8	16
FHF-351.00.00.000	351	13 5/6	10000	33	8	1/3	1,0	150	-0,08	-12	495	19 1/2	22	7/8	16
FHF-377.00.00.000	377	14 5/6	10000	33	8	1/3	1,0	150	-0,08	-12	530	20 7/8	26	1	16
FHF-402.00.00.000	402	15 5/6	10000	33	12	1/2	1,0	150	-0,08	-12	575	22 5/8	26	1	16
FHF-426.00.00.000	426	16 7/9	10000	33	12	1/2	1,0	150	-0,08	-11	600	23 5/8	26	1	20
FHF-457.00.00.000	457	18	10000	33	12	1/2	1,0	150	-0,06	-9	630	24 4/5	26	1	20
FHF-508.00.00.000	508	20	10000	33	12	1/2	1,0	150	-0,04	-6	690	27 1/6	26	1	20
FHF-530.00.00.000	530	20 7/8	10000	33	12	1/2	1,0	150	-0,04	-6	710	28	30	1 1/6	20
FHF-610.00.00.000	610	24	10000	33	15	3/5	1,0	150	-0,03	-3,75	820	32 2/7	30	1 1/6	20

PRODUCT CAN BE CUSTOMIZED ACCORDING TO CUSTOMER DRAWINGS AND SPECIFICATION, INCLUDING LARGER DIAMETERS AS REQUIRED FOR SPECIFIC OPERATING CONDITIONS

RUBBER-LINED STEEL PIPE

THE PRINCIPAL ADVANTAGE OF RUBBER-LINED STEEL PIPE IS ITS STRUCTURAL CAPACITY REQUIRING NO ADDITIONAL BEAMS FOR INSTALLATION.

Also, this type of pipe may be used both indoors and outdoors yielding maximum application efficiency.

* Flange Type and Pitch Circle Diameter `are done according Customer Specification.

BASIC SPECIFICATIONS

Inside Diameter		Standard Length		Wear-Resistant Layer Thickness		Working Pressure	
mm	**inch**	**m**	**ft**	**mm**	**inch**	**MPa**	**psi**
up to 790	up to 11 4/5	up to 6	up to 19,5	up to 15	up to 3/5	2,0	300

PRODUCT CAN BE CUSTOMIZED ACCORDING TO CUSTOMER DRAWINGS AND SPECIFICATION, INCLUDING LARGER DIAMETERS AS REQUIRED FOR SPECIFIC OPERATING CONDITIONS

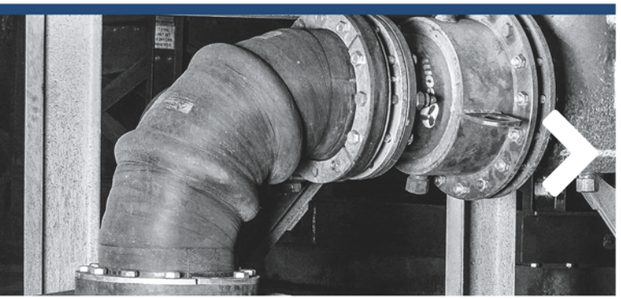

RUBBER BEND

RUBBER BENDS ARE INSTALLED IN PARTS OF A HOSE SYSTEM REQUIRING ELEVATED WEAR RESISTANCE WHERE RUBBER HOSE CANNOT PROVIDE THE REQUIRED BENDING RADIUS. BENDS ARE USED TO CHANGE THE DIRECTION OF ABRASIVE MIXTURE FLOW DURING TRANSPORTATION.

Composit LLC manufactures bends with increased large wear-resistant liners made of natural or synthetic rubber assuring abrasive resistance and longevity. Bend strength is obtained by using embedded steel components and a primary structure of fabric.

Our product range includes the following standard connections: swivel flange and embedded flange. Pitch Circle Diameter are customizable upon request.

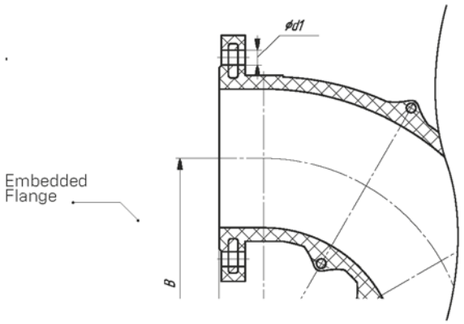

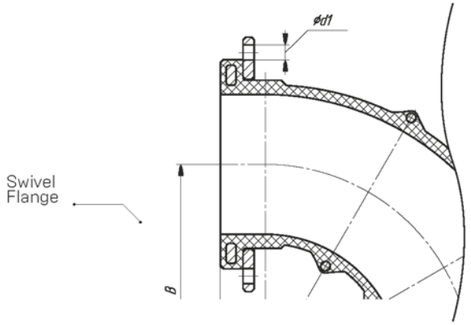

DESIGNATION EXAMPLE OF RUBBER BEND FOR ABRASIVE MATERIAL TRANSPORTATION WITH INSIDE DIAMETER OF 200 MM, EMBEDDED FLANGES, BENDING ANGLE OF 90°, AND PARTICLE SIZE OF UP TO 2.0 MM.

RB-200.01.01.90
1 2 3 4 5

1. **PRODUCT ABBREVATION**

   RB is used as the abbreviation for all Composit rubber bends.

2. **BEND DIAMETER**

   This part of designation shows the inside diameter of the bend.

3. **FLANGED CONNECTION TYPE**

   We offer three standard flanged connections as referenced in the product designation flange connection. Pitch Circle Diameter are customizable. A single hose can include two flange types for easy installation. The product designation includes the corresponding codes: 01, 02, 03.

   «01»: embedded flange

   «02»: swivel flange

   «03»: swivel and split flange on a single hose segment

4. **ID RUBBER LINER TYPE**

   The inside wear-resistant volume is a slurry line's most important component. The type of rubber used to line the inside diameter of a hose defines a line's abrasion resistance and consequently, assures trouble-free operation of the entire section. Based on operational history of slurry hose systems, we offer two standard versions of the internal wear-resistant lining, depending on the particle size of the transported material. In the designation, these are written as 01 and 02.

   «01»: for slurries with a particle size of up to 2.0 mm.

   «02»: for slurries with a particle size of up to 10 mm.

5. **BENDING ANGLE**

   Our product offering includes standard bends with angles of 90°, 75°, 60°, 45°, and 30°. Customize angle bends are also available upon request. Bending angle is represented directly by the two final digits of the hose designation.

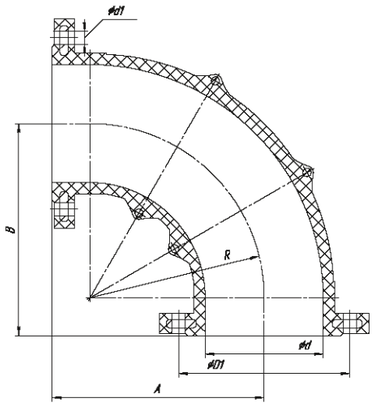

RUBBER BENDS
WITH EMBEDDED FLANGES

BASIC SPECIFICATIONS

Designation	Inside Diameter d		AxB, mm		Wear-Resistant Layer Thickness		Working Pressure		Vacuum		Bending Radius R	Weight		Pitch Circle Diameter D1		d1		n
	mm	inch	A	B	mm	inch	MPa	psi	MPa	psi	mm	kg	lb	mm	inch	mm	inch	pcs
RB-050.00.00.00	50	2	290	290	13	1/2	1,0	150	-0,08	-12	225	14	31	125	4 8/9	18	5/7	4
RB-065.00.00.00	65	2 5/9	290	290	13	3/7	1,0	150	-0,08	-12	225	15	33	145	5 5/7	18	5/7	4
RB-076.00.00.00	76	3	290	290	13	1/2	1,0	150	-0,08	-12	225	18	40	160	6 2/7	18	5/7	8
RB-102.00.00.00	102	4	290	290	13	1/2	1,0	150	-0,08	-12	225	24	53	180	7 1/9	18	5/7	8
RB-114.00.00.00	114	4 1/2	290	290	13	1/2	1,0	150	-0,08	-12	225	25	55	240	9 4/9	18	5/7	8
RB-133.00.00.00	133	5 1/4	290	290	13	1/2	1,0	150	-0,08	-12	225	28	62	240	9 4/9	22	7/8	8
RB-152.00.00.00	152	6	290	290	13	1/2	1,0	150	-0,08	-12	225	32	71	240	9 4/9	22	7/8	8
RB-159.00.00.00	159	6 1/4	290	290	13	1/2	1,0	150	-0,08	-12	225	35	77	250	9 5/6	22	7/8	8
RB-170.00.00.00	170	6 5/7	290	290	13	3/7	1,0	150	-0,08	-12	225	37	82	270	10 5/8	22	7/8	8
RB-200.00.00.00	200	7 7/8	365	365	13	1/2	1,0	150	-0,08	-12	300	41	90	295	11 5/8	22	7/8	8
RB-219.00.00.00	219	8 5/8	365	365	13	1/2	1,0	150	-0,08	-12	300	46	101	325	12 4/5	22	7/8	8
RB-245.00.00.00	245	9 5/8	440	440	13	1/2	1,0	150	-0,08	-12	375	48	106	350	13 7/9	22	7/8	12
RB-273.00.00.00	273	10 3/4	440	440	13	1/2	1,0	150	-0,08	-12	375	70	154	375	14 3/4	22	7/8	12
RB-300.00.00.00	300	11 4/5	515	515	13	1/2	1,0	150	-0,08	-12	450	75	165	430	16 8/9	22	7/8	12
RB-325.00.00.00	325	12 4/5	515	515	13	1/2	1,0	150	-0,08	-12	450	100	243	450	17 5/7	22	7/8	16
RB-351.00.00.00	351	13 5/6	590	590	13	1/2	1,0	150	-0,08	-12	525	115	254	470	18 1/2	22	7/8	16
RB-377.00.00.00	377	14 5/6	590	590	13	1/2	1,0	150	-0,08	-12	525	130	287	515	20 2/7	26	1	16
RB-402.00.00.00	402	15 5/6	665	665	13	1/2	1,0	150	-0,08	-12	600	193	426	550	21 2/3	26	1	16
RB-426.00.00.00	426	16 7/9	665	665	13	1/2	1,0	150	-0,08	-12	600	200	441	585	23	26	1	20
RB-457.00.00.00	457	18	765	765	13	1/2	1,0	150	-0,08	-12	700	250	551	630	24 4/5	26	1	20
RB-508.00.00.00	508	20	815	815	13	1/2	1,0	150	-0,08	-12	750	300	661	660	26	26	1	20
RB-530.00.00.00	530	20 7/8	815	815	13	1/2	1,0	150	-0,08	-12	750	316	697	710	28	30	1 1/6	20
RB-610.00.00.00	610	24	965	965	15	3/5	1,0	150	-0,08	-12	900	465	1025	760	29 8/9	30	1 1/6	20

PRODUCT CAN BE CUSTOMIZED ACCORDING TO CUSTOMER DRAWINGS AND SPECIFICATION, INCLUDING LARGER DIAMETERS AS REQUIRED FOR SPECIFIC OPERATING CONDITIONS

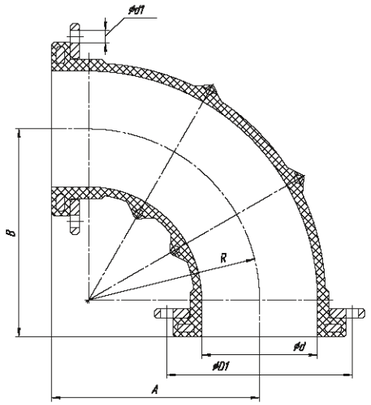

RUBBER BEND
WITH SWIVEL FLANGES

BASIC SPECIFICATIONS

Designation	Inside Diameter d		AxB, mm		Wear-Resistant Layer Thickness		Working Pressure		Vacuum		Bending Radius R	Weight		Interface Dimension D1		d1		n
	mm	inch	A	B	mm	inch	MPa	psi	MPa	psi	mm	kg	lb	mm	inch	mm	inch	pcs
RB-050.00.00.00	50	2	290	290	13	3/7	1,0	150	-0,08	-12	225	14	31	160	6 2/7	18	5/7	4
RB-065.00.00.00	65	2 5/9	290	290	13	3/7	1,0	150	-0,08	-12	225	15	33	180	7 1/9	18	5/7	4
RB-076.00.00.00	76	3	290	290	13	3/7	1,0	150	-0,08	-12	225	18	40	180	7 1/9	18	5/7	8
RB-102.00.00.00	102	4	290	290	13	3/7	1,0	150	-0,08	-12	225	24	53	210	8 1/4	18	5/7	8
RB-114.00.00.00	114	4 1/2	290	290	13	3/7	1,0	150	-0,08	-12	225	25	55	240	9 4/9	18	5/7	8
RB-133.00.00.00	133	5 1/4	290	290	13	3/7	1,0	150	-0,08	-12	225	28	62	250	9 5/6	22	7/8	8
RB-152.00.00.00	152	6	290	290	13	3/7	1,0	150	-0,08	-12	225	32	71	270	10 5/8	22	7/8	8
RB-159.00.00.00	159	6 1/4	290	290	13	3/7	1,0	150	-0,08	-12	225	35	77	275	10 5/6	22	7/8	8
RB-170.00.00.00	170	6 5/7	290	290	13	3/7	1,0	150	-0,08	-12	225	37	82	295	11 5/8	22	7/8	8
RB-200.00.00.00	200	7 7/8	365	365	13	3/7	1,0	150	-0,08	-12	300	41	90	325	12 4/5	22	7/8	8
RB-219.00.00.00	219	8 5/8	365	365	13	3/7	1,0	150	-0,08	-12	300	46	101	350	13 7/9	22	7/8	8
RB-245.00.00.00	245	9 5/8	440	440	13	3/7	1,0	150	-0,08	-12	375	48	106	375	14 3/4	22	7/8	12
RB-273.00.00.00	273	10 3/4	440	440	13	3/7	1,0	150	-0,08	-12	375	70	154	405	16	22	7/8	12
RB-300.00.00.00	300	11 4/5	515	515	13	3/7	1,0	150	-0,08	-12	450	75	165	450	17 5/7	22	7/8	12
RB-325.00.00.00	325	12 4/5	515	515	13	3/7	1,0	150	-0,08	-12	450	100	243	470	18 1/2	22	7/8	16
RB-351.00.00.00	351	13 5/6	590	590	13	3/7	1,0	150	-0,08	-12	525	115	254	495	19 1/2	22	7/8	16
RB-377.00.00.00	377	14 5/6	590	590	13	3/7	1,0	150	-0,08	-12	525	130	287	530	20 7/8	26	1	16
RB-402.00.00.00	402	15 5/6	665	665	13	3/7	1,0	150	-0,08	-12	600	193	426	575	22 5/8	26	1	16
RB-426.00.00.00	426	16 7/9	665	665	13	3/7	1,0	150	-0,08	-12	600	200	441	600	23 5/8	26	1	20
RB-457.00.00.00	457	18	765	765	13	3/7	1,0	150	-0,08	-12	700	250	551	630	24 4/5	26	1	20
RB-508.00.00.00	508	20	815	815	13	3/7	1,0	150	-0,08	-12	750	300	661	690	27 1/6	26	1	20
RB-530.00.00.00	530	20 7/8	815	815	13	3/7	1,0	150	-0,08	-12	750	316	697	710	28	30	1 1/6	20
RB-610.00.00.00	610	24	965	965	15	1/2	1,0	150	-0,08	-12	900	465	1025	820	32 2/7	30	1 1/6	20

PRODUCT CAN BE CUSTOMIZED ACCORDING TO CUSTOMER DRAWINGS AND SPECIFICATION, INCLUDING LARGER DIAMETERS AS REQUIRED FOR SPECIFIC OPERATING CONDITIONS

LONG-RADIUS RUBBER BEND

USED IN CHALLENGING SECTIONS OF HOSE SYSTEMS FOR GRADUAL CHANGES IN ABRASIVE STREAM FLOW DIRECTION.

Abrasion resistance, minimum flow resistance, and longer bending radius assure increased longevity and maximum performance. Given these bends are used in sections subject to greater abrasion, the design of a long-radius bend reduces turbulent flow and minimizes impact loads on the bend inner surface.

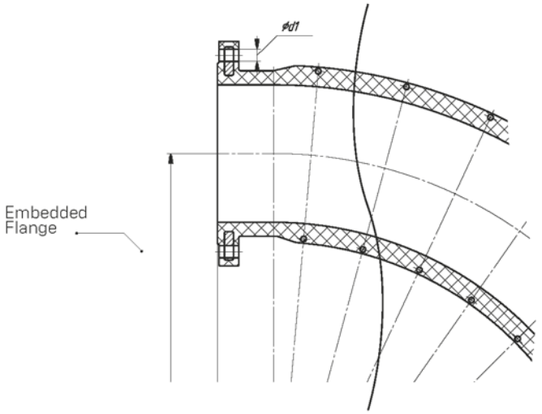

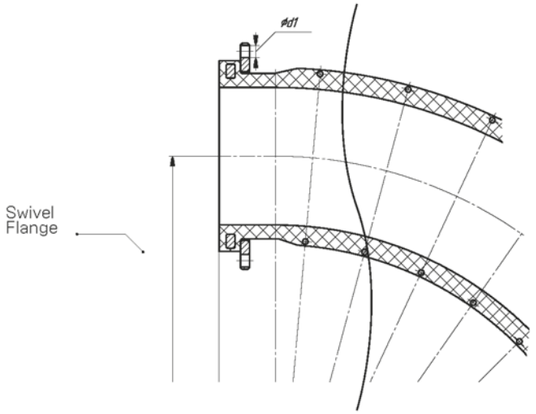

DESIGNATION EXAMPLE OF LONG-RADIUS RUBBER BEND FOR ABRASIVE MATERIAL TRANSPORTATION WITH INSIDE DIAMETER 200 MM, EMBEDDED FLANGES, BENDING ANGLE OF 90°, AND PARTICLE SIZE OF UP TO 2.0 MM.

LRRB-200.01.01.90
1 2 3 4 5

1. **PRODUCT ABBREVATION**

   LRRB is used as the abbreviation for Composit long-radius rubber bends.

2. **BEND DIAMETER**

   This part of the designation refers to the inside diameter of the bend.

3. **FLANGED CONNECTION TYPE**

   We offer three standard flanged connections as referenced in the product designation. Pitch Circle Diameterare customizable. A single hose can include two flange types for easy installation. Product designation includes the corresponding codes: 01, 02, 03.

   «01»: embedded flange

   «02»: swivel flange

   «03»: swivel and split flange on a single hose segment

4. **ID RUBBER LINER TYPE**

   The inside wear-resistant volume is a slurry line's most important component. The type of rubber used to line the inside diameter of a hose defines a line's abrasion resistance and consequently, assures trouble-free operation of the entire section. Based on operational history of slurry hose systems, we offer two standard versions of the internal wear-resistant lining, depending on the particle size of the transported material. In the designation, these are written as 01 and 02.

   «01»: for slurries with a particle size of up to 2.0 mm.

   «02» : for slurries with a particle size of up to 10 mm.

5. **BENDING ANGLE**

   Our product offering includes standard bends with angles of 90°, 75°, 60°, 45°, and 30°. Customized-angle bends are also available upon request. Bending angle is represented directly by the two final digits of the hose designation.

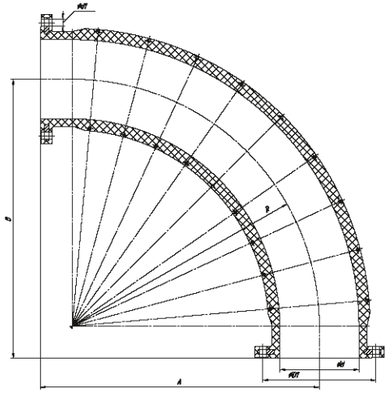

LONG-RADIUS RUBBER BEND WITH EMBEDDED FLANGES

BASIC SPECIFICATIONS

Designation	Inside Diameter d		AxB, mm		Wear-Resistant Layer Thickness		Working Pressure		Vacuum		Bending Radius R	Bend Weight		Pitch Circle Diameter D1		Pitch Circle Diameter d1		n
	mm	inch	A	B	mm	inch	MPa	psi	MPa	psi	mm	kg	lb	mm	inch	mm	inch	pcs
LRRB-050.00.00.00	50	2	290	290	5	1/5	1,0	150	-0,08	-12	225	14	31	125	4 8/9	18	5/7	4
LRRB-065.00.00.00	65	2 5/9	290	290	6	1/4	1,0	150	-0,08	-12	225	15	33	145	5 5/7	18	5/7	4
LRRB-076.00.00.00	76	3	290	290	6	1/4	1,0	150	-0,08	-12	225	18	40	160	6 2/7	18	5/7	8
LRRB-102.00.00.00	102	4	370	370	6	1/4	1,0	150	-0,08	-12	305	27	53	180	7 1/9	18	5/7	8
LRRB-114.00.00.00	114	4 1/2	405	405	6	1/4	1,0	150	-0,08	-12	340	29	64	240	9 4/9	18	5/7	8
LRRB-133.00.00.00	133	5 1/4	465	465	6	1/4	1,0	150	-0,08	-12	400	31	68	240	9 4/9	22	7/8	8
LRRB-152.00.00.00	152	6	515	515	6	1/4	1,0	150	-0,08	-12	450	40	88	240	9 4/9	22	7/8	8
LRRB-159.00.00.00	159	6 1/4	545	545	6	1/4	1,0	150	-0,08	-12	480	42	93	250	9 5/6	22	7/8	8
LRRB-170.00.00.00	170	6 5/7	575	575	7	2/7	1,0	150	-0,08	-12	510	50	110	270	10 5/8	22	7/8	8
LRRB-200.00.00.00	200	7 7/8	665	665	7	2/7	1,0	150	-0,08	-12	600	66	146	295	11 5/8	22	7/8	8
LRRB-219.00.00.00	219	8 5/8	725	725	7	2/7	1,0	150	-0,08	-12	660	76	168	325	12 4/5	22	7/8	8
LRRB-245.00.00.00	245	9 5/8	815	815	7	2/7	1,0	150	-0,08	-12	750	85	187	350	13 7/9	22	7/8	12
LRRB-273.00.00.00	273	10 3/4	885	885	7	2/7	1,0	150	-0,08	-12	820	105	231	375	14 3/4	22	7/8	12
LRRB-300.00.00.00	300	11 4/5	965	965	8	1/3	1,0	150	-0,08	-12	900	125	276	430	16 8/9	22	7/8	12
LRRB-325.00.00.00	325	12 4/5	1040	1040	8	1/3	1,0	150	-0,08	-12	975	154	340	450	17 5/7	22	7/8	16
LRRB-351.00.00.00	351	13 5/6	1115	1115	8	1/3	1,0	150	-0,08	-12	1050	160	353	470	18 1/2	22	7/8	16
LRRB-377.00.00.00	377	14 5/6	1195	1195	8	1/3	1,0	150	-0,08	-12	1130	190	419	515	20 2/7	26	1	16
LRRB-402.00.00.00	402	15 5/6	1265	1265	12	1/2	1,0	150	-0,08	-12	1200	220	485	550	21 2/3	26	1	16
LRRB-426.00.00.00	426	16 7/9	1345	1345	12	1/2	1,0	150	-0,08	-12	1280	281	620	585	23	26	1	20
LRRB-457.00.00.00	457	18	1435	1435	12	1/2	1,0	150	-0,08	-12	1370	345	761	630	24 4/5	26	1	20
LRRB-508.00.00.00	508	20	1615	1615	12	1/2	1,0	150	-0,08	-12	1520	425	937	660	26	26	1	20
LRRB-530.00.00.00	530	20 7/8	1655	1655	12	1/2	1,0	150	-0,08	-12	1590	465	1025	710	28	30	1 1/6	20
LRRB-610.00.00.00	610	24	1895	1895	15	3/5	1,0	150	-0,08	-12	1830	520	1146	760	29 8/9	30	1 1/6	20

PRODUCT CAN BE CUSTOMIZED ACCORDING TO CUSTOMER DRAWINGS AND SPECIFICATION, INCLUDING LARGER DIAMETERS AS REQUIRED FOR SPECIFIC OPERATING CONDITIONS

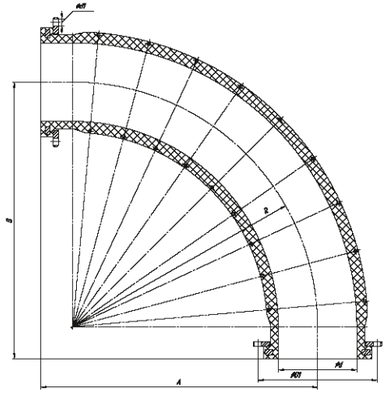

LONG RADIUS RUBBER BEND WITH SWIVEL FLANGES

BASIC SPECIFICATIONS

Designation	Inside Diameter d		AxB, mm		Wear-Resistant Layer Thickness		Working Pressure		Vacuum		Bending Radius R	Bend Weight		Pitch Circle Diameter D1		Pitch Circle Diameter d1		n
	mm	inch	A	B	mm	inch	MPa	psi	MPa	psi	mm	kg	lb	mm	inch	mm	inch	pcs
LRRB-050.00.00.00	50	2	290	290	5	1/5	1,0	150	-0,08	-12	225	14	31	160	6 2/7	18	5/7	4
LRRB-065.00.00.00	65	2 5/9	290	290	6	1/4	1,0	150	-0,08	-12	225	15	33	180	7 1/9	18	5/7	4
LRRB-076.00.00.00	76	3	290	290	6	1/4	1,0	150	-0,08	-12	225	18	40	180	7 1/9	18	5/7	8
LRRB-102.00.00.00	102	4	370	370	6	1/4	1,0	150	-0,08	-12	305	28	62	210	8 1/4	18	5/7	8
LRRB-114.00.00.00	114	4 1/2	405	405	6	1/4	1,0	150	-0,08	-12	340	30	66	240	9 4/9	18	5/7	8
LRRB-133.00.00.00	133	5 1/4	465	465	6	1/4	1,0	150	-0,08	-12	400	32	71	250	9 5/6	22	7/8	8
LRRB-152.00.00.00	152	6	515	515	6	1/4	1,0	150	-0,08	-12	450	43	95	270	10 5/8	22	7/8	8
LRRB-159.00.00.00	159	6 1/4	545	545	6	1/4	1,0	150	-0,08	-12	480	45	99	275	10 5/6	22	7/8	8
LRRB-170.00.00.00	170	6 5/7	575	575	7	2/7	1,0	150	-0,08	-12	510	55	121	295	11 5/8	22	7/8	8
LRRB-200.00.00.00	200	7 7/8	665	665	7	2/7	1,0	150	-0,08	-12	600	70	154	325	12 4/5	22	7/8	8
LRRB-219.00.00.00	219	8 5/8	725	725	7	2/7	1,0	150	-0,08	-12	660	80	176	350	13 7/9	22	7/8	8
LRRB-245.00.00.00	245	9 5/8	815	815	7	2/7	1,0	150	-0,08	-12	750	90	198	375	14 3/4	22	7/8	12
LRRB-273.00.00.00	273	10 3/4	885	885	7	2/7	1,0	150	-0,08	-12	820	110	243	405	16	22	7/8	12
LRRB-300.00.00.00	300	11 4/5	965	965	8	1/3	1,0	150	-0,08	-12	900	135	298	450	17 5/7	22	7/8	12
LRRB-325.00.00.00	325	12 4/5	1040	1040	8	1/3	1,0	150	-0,08	-12	975	166	366	470	18 1/2	22	7/8	16
LRRB-351.00.00.00	351	13 5/6	1115	1115	8	1/3	1,0	150	-0,08	-12	1050	176	388	495	19 1/2	22	7/8	16
LRRB-377.00.00.00	377	14 5/6	1195	1195	8	1/3	1,0	150	-0,08	-12	1130	210	465	530	20 7/8	26	1	16
LRRB-402.00.00.00	402	15 5/6	1265	1265	12	1/2	1,0	150	-0,08	-12	1200	240	529	575	22 5/8	26	1	16
LRRB-426.00.00.00	426	16 7/9	1345	1345	12	1/2	1,0	150	-0,08	-12	1280	305	672	600	23 5/8	26	1	20
LRRB-457.00.00.00	457	18	1435	1435	12	1/2	1,0	150	-0,08	-12	1370	373	822	630	24 4/5	26	1	20
LRRB-508.00.00.00	508	20	1615	1615	12	1/2	1,0	150	-0,08	-12	1520	445	981	690	27 1/6	26	1	20
LRRB-530.00.00.00	530	20 7/8	1655	1655	12	1/2	1,0	150	-0,08	-12	1590	490	1080	710	28	30	1 1/6	20
LRRB-610.00.00.00	610	24	1895	1895	15	3/5	1,0	150	-0,08	-12	1830	545	1202	820	32 2/7	30	1 1/6	20

PRODUCT CAN BE CUSTOMIZED ACCORDING TO CUSTOMER DRAWINGS AND SPECIFICATION, INCLUDING LARGER DIAMETERS AS REQUIRED FOR SPECIFIC OPERATING CONDITIONS

RUBBER-LINED STEEL BEND

RUBBER-LINED STEEL BENDS ARE DESIGNED TO CHANGE ABRASIVE SLURRY STREAM FLOW DIRECTION DURING TRANSPORTATION.

A bend consists of a metal jacket and an ID rubber liner made of natural or synthetic rubber providing increased abrasion resistance. The metal jacket is manufactured from high-strength steel which prevents item from deformation during operation.

Rubber-lined steel bends are used wherever there is need to change the direction of slurry flow in high-wear areas of the system.

In coal washeries and beneficiation plants, rubber-lined steel bends are used in different processing steps of both inside factory and tailings yards.

Installation does not require any special tools and uses bolts instead.

If necessary, bends can be equipped with transition flanges for changing from one diameter to another, in accordance with international measurement systems.

DESIGNATION EXAMPLE OF RUBBER-LINED STEEL BENDS TO TRANSPORT ABRASIVE MATERIALS WITH A PARTICLE SIZE OF UP TO 2.0 MM WITH AN INSIDE DIAMETER OF 200 MM, EMBEDDED FLANGES, AND A BENDING ANGLE OF 90°.

RLSB-200.01.01.90
1 2 3 4 5

1. **APRODUCT ABBREVATION**

   RLSB is used as the abbreviation for Composit rubber-lined steel bends.

2. **BEND DIAMETER**

   This part of designation shows the inside diameter of the bend.

3. **FLANGED CONNECTION TYPE**

   We offer three standard flanged connections as referenced in the product designation. Pitch Circle Diameters are customizable. A single hose can include two flange types for easy installation. Product designation includes the corresponding codes: 01, 02.

   «01»: embedded flange

   «02»: swivel flange

4. **ID RUBBER LINER TYPE**

   The inside wear-resistant volume is a slurry line's most important component. The type of rubber used to line the inside diameter of a hose defines a line's abrasion resistance and consequently, assures trouble-free operation of the entire section. Based on operational history of slurry hose systems, we offer two standard versions of the internal wear-resistant lining, depending on the particle size of the transported material. In the designation, these are written as 01 and 02.

   «01»: for slurries with a particle size of up to 2.0 mm.

   «02»: for slurries with a particle size of up to 10 mm.

5. **BENDING ANGLE**

   Our product offering includes standard bends with angles of 90°, 75°, 60°, 45°, and 30°. Customized-angle bends are also available upon request. Bending angle is represented directly by the two final digits of the hose designation.

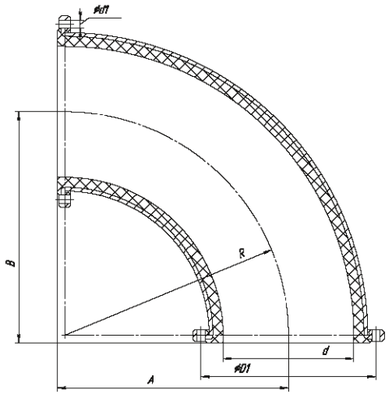

RUBBER-LINED STEEL BEND WITH WELDED FLANGES

BASIC SPECIFICATIONS

Designation	Inside Diameter d		AxB, mm		Wear-Resistant Layer Thickness		Working Pressure		Vacuum		Bending Radius R	Bend Weight		Pitch Circle Diameter D1		Pitch Circle Diameter d1		n
	mm	inch	A	B	mm	inch	MPa	psi	MPa	psi	mm	kg	lb	mm	inch	mm	inch	pcs
RLSB-050.00.00.00	50	2	135	135	12	1/2	2,0	150	-0,08	-12	120	7	15	125	4 8/9	18	5/7	4
RLSB-065.00.00.00	65	2 5/9	165	165	15	3/5	2,0	150	-0,08	-12	150	9	33	145	5 5/7	18	5/7	4
RLSB-076.00.00.00	76	3	165	165	15	3/5	2,0	150	-0,08	-12	150	15	20	160	6 2/7	18	5/7	8
RLSB-102.00.00.00	102	4	210	210	15	3/5	2,0	150	-0,08	-12	190	17	37	180	7 1/9	18	5/7	8
RLSB-114.00.00.00	114	4 1/2	245	245	15	3/5	2,0	150	-0,08	-12	225	23	51	240	9 4/9	18	5/7	8
RLSB-133.00.00.00	133	5 1/4	252	252	15	3/5	2,0	150	-0,08	-12	229	24	53	240	9 4/9	22	7/8	8
RLSB-152.00.00.00	152	6	242	242	15	3/5	2,0	150	-0,08	-12	225	23	51	240	9 4/9	22	7/8	8
RLSB-159.00.00.00	159	6 1/4	322	322	15	3/5	2,0	150	-0,08	-12	300	34	75	250	9 5/6	22	7/8	8
RLSB-170.00.00.00	170	6 5/7	322	322	17	2/3	2,0	150	-0,08	-12	300	36	79	270	10 5/8	22	7/8	8
RLSB-200.00.00.00	200	7 7/8	395	395	17	2/3	2,0	150	-0,08	-12	375	40	88	295	11 5/8	22	7/8	8
RLSB-219.00.00.00	219	8 5/8	395	395	17	2/3	2,0	150	-0,08	-12	375	55	121	325	12 4/5	22	7/8	8
RLSB-245.00.00.00	245	9 5/8	468	468	17	2/3	2,0	150	-0,08	-12	450	80	176	350	13 7/9	22	7/8	12
RLSB-273.00.00.00	273	10 3/4	472	472	18	5/7	2,0	150	-0,08	-12	450	85	187	375	14 3/4	22	7/8	12
RLSB-300.00.00.00	300	11 4/5	550	550	18	5/7	2,0	150	-0,08	-12	525	120	265	430	16 8/9	22	7/8	12
RLSB-325.00.00.00	325	12 4/5	550	550	18	5/7	2,0	150	-0,08	-12	525	150	331	450	17 5/7	22	7/8	16
RLSB-351.00.00.00	351	13 5/6	621	621	18	5/7	2,0	150	-0,08	-12	600	165	364	470	18 1/2	22	7/8	16
RLSB-377.00.00.00	377	14 5/6	620	620	18	5/7	2,0	150	-0,08	-12	600	160	353	515	20 2/7	26	1	16
RLSB-402.00.00.00	402	15 5/6	625	625	18	5/7	2,0	150	-0,08	-12	600	170	375	550	21 2/3	26	1	16
RLSB-426.00.00.00	426	16 7/9	525	525	18	5/7	2,0	150	-0,08	-12	500	200	441	585	23	26	1	20
RLSB-457.00.00.00	457	18	525	525	18	5/7	2,0	150	-0,08	-12	500	250	551	630	24 4/5	26	1	20
RLSB-508.00.00.00	508	20	780	780	20	7/9	2,0	150	-0,08	-12	750	250	551	660	26	26	1	20
RLSB-530.00.00.00	530	20 7/8	625	625	25	1	2,0	150	-0,08	-12	750	300	683	710	28	30	1 1/6	20
RLSB-610.00.00.00	610	24	730	730	30	1 1/6	2,0	150	-0,08	-12	900	310	728	760	29 8/9	30	1 1/6	20

PRODUCT CAN BE CUSTOMIZED ACCORDING TO CUSTOMER DRAWINGS AND SPECIFICATION, INCLUDING LARGER DIAMETERS AS REQUIRED FOR SPECIFIC OPERATING CONDITIONS

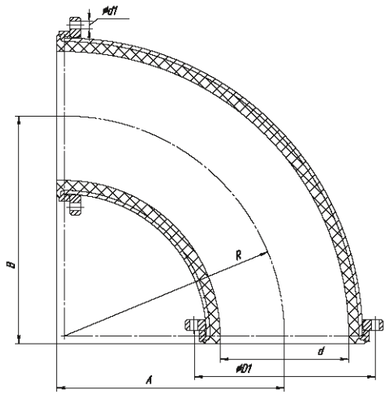

RUBBER-LINED STEEL BEND WITH SWIVEL FLANGES

BASIC SPECIFICATIONS

Designation	Inside Diameter d		AxB, mm		Wear-Resistant Layer Thickness		Working Pressure		Vacuum		Bending Radius R	Bend Weight		Pitch Circle Diameter D1		Pitch Circle Diameter d1		n
	mm	inch	A	B	mm	inch	MPa	psi	MPa	psi	mm	kg	lb	mm	inch	mm	inch	pcs
RLSB-050.00.00.00	50	2	135	135	12	1/2	2,0	150	-0,08	-12	120	10	15	160	4 8/9	18	5/7	4
RLSB-065.00.00.00	65	2 5/9	165	165	15	3/5	2,0	150	-0,08	-12	150	13	33	180	5 5/7	18	5/7	4
RLSB-076.00.00.00	76	3	165	165	15	3/5	2,0	150	-0,08	-12	150	15	20	180	6 2/7	18	5/7	8
RLSB-102.00.00.00	102	4	210	210	15	3/5	2,0	150	-0,08	-12	190	20	37	210	7 1/9	18	5/7	8
RLSB-114.00.00.00	114	4 1/2	245	245	15	3/5	2,0	150	-0,08	-12	225	25	51	240	9 4/9	18	5/7	8
RLSB-133.00.00.00	133	5 1/4	252	252	15	3/5	2,0	150	-0,08	-12	229	30	53	250	9 4/9	22	7/8	8
RLSB-152.00.00.00	152	6	243	243	15	3/5	2,0	150	-0,08	-12	225	35	51	270	9 4/9	22	7/8	8
RLSB-159.00.00.00	159	6 1/4	322	322	15	3/5	2,0	150	-0,08	-12	300	40	75	275	9 5/6	22	7/8	8
RLSB-170.00.00.00	170	6 5/7	322	322	17	2/3	2,0	150	-0,08	-12	300	45	79	295	10 5/8	22	7/8	8
RLSB-200.00.00.00	200	7 7/8	395	395	17	2/3	2,0	150	-0,08	-12	375	55	88	325	11 5/8	22	7/8	8
RLSB-219.00.00.00	219	8 5/8	395	395	17	2/3	2,0	150	-0,08	-12	375	75	121	350	12 4/5	22	7/8	8
RLSB-245.00.00.00	245	9 5/8	473	473	17	2/3	2,0	150	-0,08	-12	450	95	176	375	13 7/9	22	7/8	12
RLSB-273.00.00.00	273	10 3/4	472	472	18	5/7	2,0	150	-0,08	-12	450	100	187	405	14 3/4	22	7/8	12
RLSB-300.00.00.00	300	11 4/5	550	550	18	5/7	2,0	150	-0,08	-12	525	130	265	450	16 8/9	22	7/8	12
RLSB-325.00.00.00	325	12 4/5	550	550	18	5/7	2,0	150	-0,08	-12	525	140	331	470	17 5/7	22	7/8	16
RLSB-351.00.00.00	351	13 5/6	620	620	18	5/7	2,0	150	-0,08	-12	600	190	364	495	18 1/2	22	7/8	16
RLSB-377.00.00.00	377	14 5/6	620	620	18	5/7	2,0	150	-0,08	-12	600	190	353	530	20 2/7	26	1	16
RLSB-402.00.00.00	402	15 5/6	628	628	18	5/7	2,0	150	-0,08	-12	600	240	375	575	21 2/3	26	1	16
RLSB-426.00.00.00	426	16 7/9	575	575	18	5/7	2,0	150	-0,08	-12	500	260	441	600	23	26	1	20
RLSB-457.00.00.00	457	18	525	525	18	5/7	2,0	150	-0,08	-12	500	270	551	630	24 4/5	26	1	20
RLSB-508.00.00.00	508	20	780	780	20	7/9	2,0	150	-0,08	-12	750	300	551	690	26	26	1	20
RLSB-530.00.00.00	530	20 7/8	625	625	25	1	2,0	150	-0,08	-12	750	350	683	710	28	30	1 1/6	20
RLSB-610.00.00.00	610	24	730	730	30	1 1/6	2,0	150	-0,08	-12	900	390	728	820	29 8/9	30	1 1/6	20

PRODUCT CAN BE CUSTOMIZED ACCORDING TO CUSTOMER DRAWINGS AND SPECIFICATION, INCLUDING LARGER DIAMETERS AS REQUIRED FOR SPECIFIC OPERATING CONDITIONS

LONG-RADIUS RUBBER-LINED STEEL BEND

LONG-RADIUS RUBBER-LINED STEEL BENDS ARE DESIGNED FOR GRADUAL CHANGES IN ABRASIVE STREAM FLOW DIRECTION.

A bend consists of a metal jacket and an ID rubber liner made of natural or synthetic rubber providing increased abrasion resistance.

The metal jacket is manufactured from high-strength steel which guarantees the item from deformation during operation.

Long-radius rubber-lined steel bends are used wherever there is need to change the direction of slurry flow gradually in high-wear areas of a pipeline system

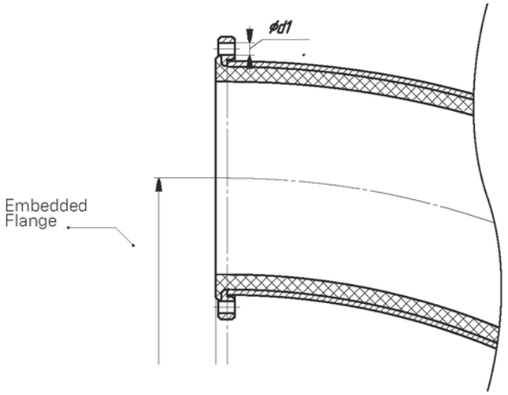

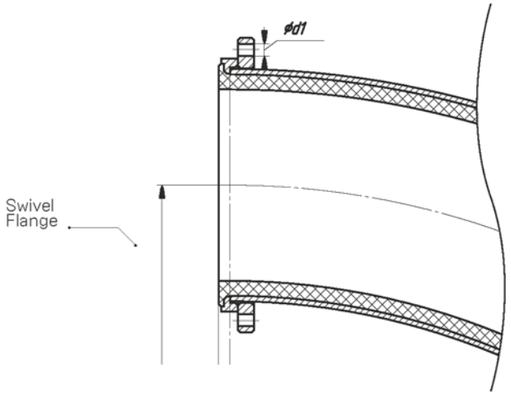

EXAMPLE DESIGNATION OF A LONG-RADIUS RUBBER-LINED STEEL BEND TO TRANSPORT ABRASIVE MATERIALS WITH A PARTICLE SIZE OF UP TO 2.0 MM WITH AN INSIDE DIAMETER OF 200 MM, EMBEDDED FLANGES, AND BENDING ANGLE OF 90°.

LRRLSB-200.01.01.90
1 2 3 4 5

1. **PRODUCT ABBREVATION**

   LRRLSB is applied as the abbreviation for Composit long-radius rubber-lined steel bends.

2. **BEND DIAMETER**

   This part of designation shows the inside diameter of the bend.

3. **FLANGED CONNECTION TYPE**

   We offer three standard flanged connections as referenced in the product designation. Pitch Circle Diameters are customizable. A single hose can include two flange for easy installation. Product designation includes the corresponding codes: 01, 02.

   «01»: embedded flange

   «02»: swivel flange

4. **ID RUBBER LINER TYPE**

   The inside wear-resistant volume is a slurry line's most important component. The type of rubber used to line the inside diameter of a hose defines a line's abrasion resistance and consequently, assures trouble-free operation of the entire section. Based on operational history of slurry hose systems, we offer two standard versions of the internal wear-resistant lining, depending on the particle size of the transported material. In the designation, these are written as 01 and 02.

   «01»: for slurries with a particle size of up to 2.0 mm.

   «02»: for slurries with a particle size of up to 10 mm.

5. **BENDING ANGLE**

   Our product offering includes standard bends with angles of 90°, 75°, 60°, 45°, and 30°. Customize dangle bends are also available upon request. Bending angle is represented directly by the two final digits of the hose designation.

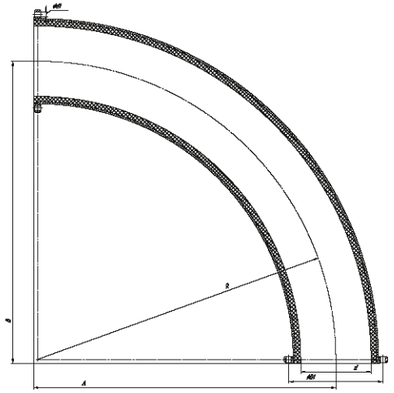

LONG-RADIUS STEEL-RUBBER LINED BEND WITH WELDED FLANGES

BASIC SPECIFICATIONS

Designation	Inside Diameter d		AxB, mm		Wear-Resistant Layer Thickness		Working Pressure		Vacuum		Bending Radius R	Bend Weight		Pitch Circle Diameter D1		Pitch Circle Diameter d1		n
	mm	inch	A	B	mm	inch	MPa	psi	MPa	psi	mm	kg	lb	mm	inch	mm	inch	pcs
LRRLSB-050.00.00.00	50	2	165	165	12	1/2	2,0	300	-0,08	-12	150	19	42	125	4 8/9	18	5/7	4
LRRLSB-065.00.00.00	65	2 5/9	215	215	15	3/5	2,0	300	-0,08	-12	200	22	48	145	5 5/7	18	5/7	4
LRRLSB-076.00.00.00	76	3	245	245	15	3/5	2,0	300	-0,08	-12	230	23	51	160	6 2/7	18	5/7	8
LRRLSB-102.00.00.00	102	4	320	320	15	3/5	2,0	300	-0,08	-12	300	27	60	180	7 1/9	18	5/7	8
LRRLSB-114.00.00.00	114	4 1/2	360	360	15	3/5	2,0	300	-0,08	-12	340	33	73	240	9 4/9	18	5/7	8
LRRLSB-133.00.00.00	133	5 1/4	420	420	15	3/5	2,0	300	-0,08	-12	400	39	86	240	9 4/9	22	7/8	8
LRRLSB-152.00.00.00	152	6	480	480	15	3/5	2,0	300	-0,08	-12	460	47	104	240	9 4/9	22	7/8	8
LRRLSB-159.00.00.00	159	6 1/4	500	500	15	3/5	2,0	300	-0,08	-12	480	50	110	250	9 5/6	22	7/8	8
LRRLSB-170.00.00.00	170	6 5/7	530	530	17	2/3	2,0	300	-0,08	-12	510	65	143	270	10 5/8	22	7/8	8
LRRLSB-200.00.00.00	200	7 7/8	620	620	17	2/3	2,0	300	-0,08	-12	600	90	198	295	11 5/8	22	7/8	8
LRRLSB-219.00.00.00	219	8 5/8	680	680	17	2/3	2,0	300	-0,08	-12	660	105	231	325	12 4/5	22	7/8	8
LRRLSB-245.00.00.00	245	9 5/8	765	765	17	2/3	2,0	300	-0,08	-12	740	140	309	350	13 7/9	22	7/8	12
LRRLSB-273.00.00.00	273	10 3/4	845	845	18	5/7	2,0	300	-0,08	-12	820	170	375	375	14 3/4	22	7/8	12
LRRLSB-300.00.00.00	300	11 4/5	925	925	18	5/7	2,0	300	-0,08	-12	900	190	419	430	16 8/9	22	7/8	12
LRRLSB-325.00.00.00	325	12 4/5	1000	1000	18	5/7	2,0	300	-0,08	-12	975	220	485	450	17 5/7	22	7/8	16
LRRLSB-351.00.00.00	351	13 5/6	1075	1075	18	5/7	2,0	300	-0,08	-12	1050	235	518	470	18 1/2	22	7/8	16
LRRLSB-377.00.00.00	377	14 5/6	1155	1155	18	5/7	2,0	300	-0,08	-12	1130	285	628	515	20 2/7	26	1	16
LRRLSB-402.00.00.00	402	15 5/6	1230	1230	18	5/7	2,0	300	-0,08	-12	1200	375	827	550	21 2/3	26	1	16
LRRLSB-426.00.00.00	426	16 7/9	1310	1310	18	5/7	2,0	300	-0,08	-12	1280	380	838	585	23	26	1	20
LRRLSB-457.00.00.00	457	18	1400	1400	18	5/7	2,0	300	-0,08	-12	1370	410	904	630	24 4/5	26	1	20
LRRLSB-508.00.00.00	508	20	1550	1550	20	7/9	2,0	300	-0,08	-12	1520	500	1102	660	26	26	1	20
LRRLSB-530.00.00.00	530	20 7/8	1630	1630	25	1	2,0	300	-0,08	-12	1590	710	1565	710	28	30	1 1/6	20
LRRLSB-610.00.00.00	610	24	1870	1870	30	1 1/6	2,0	300	-0,08	-12	1830	900	1984	760	29 8/9	30	1 1/6	20

PRODUCT CAN BE CUSTOMIZED ACCORDING TO CUSTOMER DRAWINGS AND SPECIFICATION, INCLUDING LARGER DIAMETERS AS REQUIRED FOR SPECIFIC OPERATING CONDITIONS

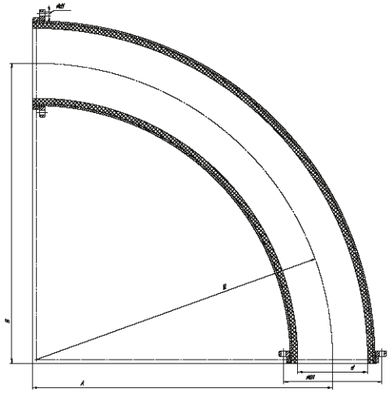

LONG-RADIUS STEEL-RUBBER LINED BEND WITH SWIVEL FLANGES

BASIC SPECIFICATIONS

Designation	Inside Diameter d		AxB, mm		Wear-Resistant Layer Thickness		Working Pressure		Vacuum		Bending Radius R	Bend Weight		Pitch Circle Diameter D1		Pitch Circle Diameter d1		n
	mm	inch	A	B	mm	inch	MPa	psi	MPa	psi	mm	kg	lb	mm	inch	mm	inch	pcs
LRRLSB-050.00.00.00	50	2	165	165	12	1/2	2,0	300	-0,08	-12	150	20	44	160	6 2/7	18	5/7	4
LRRLSB-065.00.00.00	65	2 5/9	215	215	15	3/5	2,0	300	-0,08	-12	200	22	48	180	7 1/9	18	5/7	4
LRRLSB-076.00.00.00	76	3	245	245	15	3/5	2,0	300	-0,08	-12	230	25	55	180	7 1/9	18	5/7	8
LRRLSB-102.00.00.00	102	4	320	320	15	3/5	2,0	300	-0,08	-12	300	30	66	210	8 1/4	18	5/7	8
LRRLSB-114.00.00.00	114	4 1/2	360	360	15	3/5	2,0	300	-0,08	-12	340	35	77	240	9 4/9	18	5/7	8
LRRLSB-133.00.00.00	133	5 1/4	420	420	15	3/5	2,0	300	-0,08	-12	400	42	93	250	9 5/6	22	7/8	8
LRRLSB-152.00.00.00	152	6	480	480	15	3/5	2,0	300	-0,08	-12	460	50	110	270	10 5/8	22	7/8	8
LRRLSB-159.00.00.00	159	6 1/4	500	500	15	3/5	2,0	300	-0,08	-12	480	55	121	275	10 5/6	22	7/8	8
LRRLSB-170.00.00.00	170	6 5/7	530	530	17	2/3	2,0	300	-0,08	-12	510	75	165	295	11 5/8	22	7/8	8
LRRLSB-200.00.00.00	200	7 7/8	620	620	17	2/3	2,0	300	-0,08	-12	600	100	220	325	12 4/5	22	7/8	8
LRRLSB-219.00.00.00	219	8 5/8	680	680	17	2/3	2,0	300	-0,08	-12	660	120	187	350	13 7/9	22	7/8	8
LRRLSB-245.00.00.00	245	9 5/8	765	765	17	2/3	2,0	300	-0,08	-12	740	150	330	375	14 3/4	22	7/8	12
LRRLSB-273.00.00.00	273	10 3/4	845	845	18	5/7	2,0	300	-0,08	-12	820	180	419	405	16	22	7/8	12
LRRLSB-300.00.00.00	300	11 4/5	925	925	18	5/7	2,0	300	-0,08	-12	900	200	463	450	17 5/7	22	7/8	12
LRRLSB-325.00.00.00	325	12 4/5	1000	1000	18	5/7	2,0	300	-0,08	-12	975	230	507	470	18 1/2	22	7/8	16
LRRLSB-351.00.00.00	351	13 5/6	1075	1075	18	5/7	2,0	300	-0,08	-12	1050	250	551	495	19 1/2	22	7/8	16
LRRLSB-377.00.00.00	377	14 5/6	1155	1155	18	5/7	2,0	300	-0,08	-12	1130	300	661	530	20 7/8	26	1	16
LRRLSB-402.00.00.00	402	15 5/6	1230	1230	18	5/7	2,0	300	-0,08	-12	1200	380	860	575	22 5/8	26	1	16
LRRLSB-426.00.00.00	426	16 7/9	1310	1310	18	5/7	2,0	300	-0,08	-12	1280	400	882	600	23 5/8	26	1	20
LRRLSB-457.00.00.00	457	18	1400	1400	18	5/7	2,0	300	-0,08	-12	1370	430	948	630	24 4/5	26	1	20
LRRLSB-508.00.00.00	508	20	1550	1550	20	7/9	2,0	300	-0,08	-12	1520	520	1146	690	27 1/6	26	1	20
LRRLSB-530.00.00.00	530	20 7/8	1630	1630	25	1	2,0	300	-0,08	-12	1590	720	1587	710	28	30	1 1/6	20
LRRLSB-610.00.00.00	610	24	1870	1870	30	1 1/6	2,0	300	-0,08	-12	1830	920	2028	820	32 2/7	30	1 1/6	20

PRODUCT CAN BE CUSTOMIZED ACCORDING TO CUSTOMER DRAWINGS AND SPECIFICATION, INCLUDING LARGER DIAMETERS AS REQUIRED FOR SPECIFIC OPERATING CONDITIONS

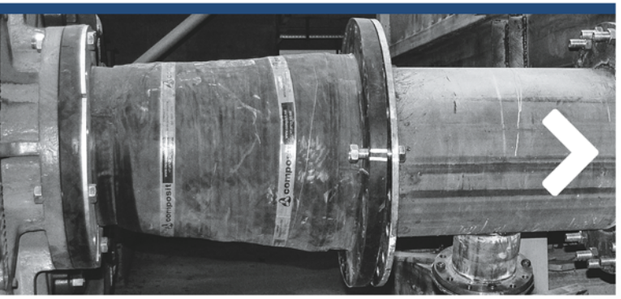

CONCENTRIC RUBBER REDUCER

USED AS DIAMETER ADAPTER.

Due to its ability to reduce flow turbulence, wear on the hose system is also reduced, thus providing smooth operation in sections with severe abrasive wear. Rubber reducers are manufactured with a fixed inclination of 6 degrees on either side of the axis (12 degrees in total).

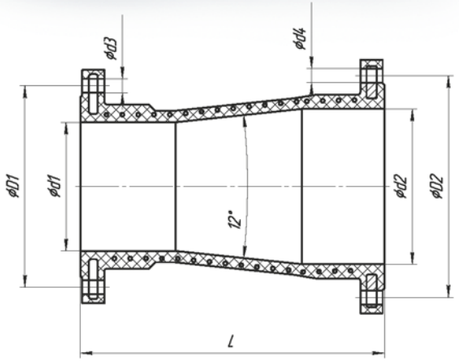

BASIC SPECIFICATIONS

Inside Diameter				Wear-Resistant Layer Thickness		Working Pressure		Test Pressure		Burst Pressure		Vacuum		Angle
mm	**inch**	**mm**	**inch**	**mm**	**inch**	**MPa**	**psi**	**MPa**	**psi**	**MPa**	**psi**	**MPa**	**psi**	**deg**
from 50	2	up to 610	up to 24	up to 15	up to 3/5	1,0	150	1,5	225	3,0	450	-0,08	-12	12°

PRODUCT CAN BE CUSTOMIZED ACCORDING TO CUSTOMER DRAWINGS AND SPECIFICATION, INCLUDING LARGER DIAMETERS AS REQUIRED FOR SPECIFIC OPERATING CONDITIONS

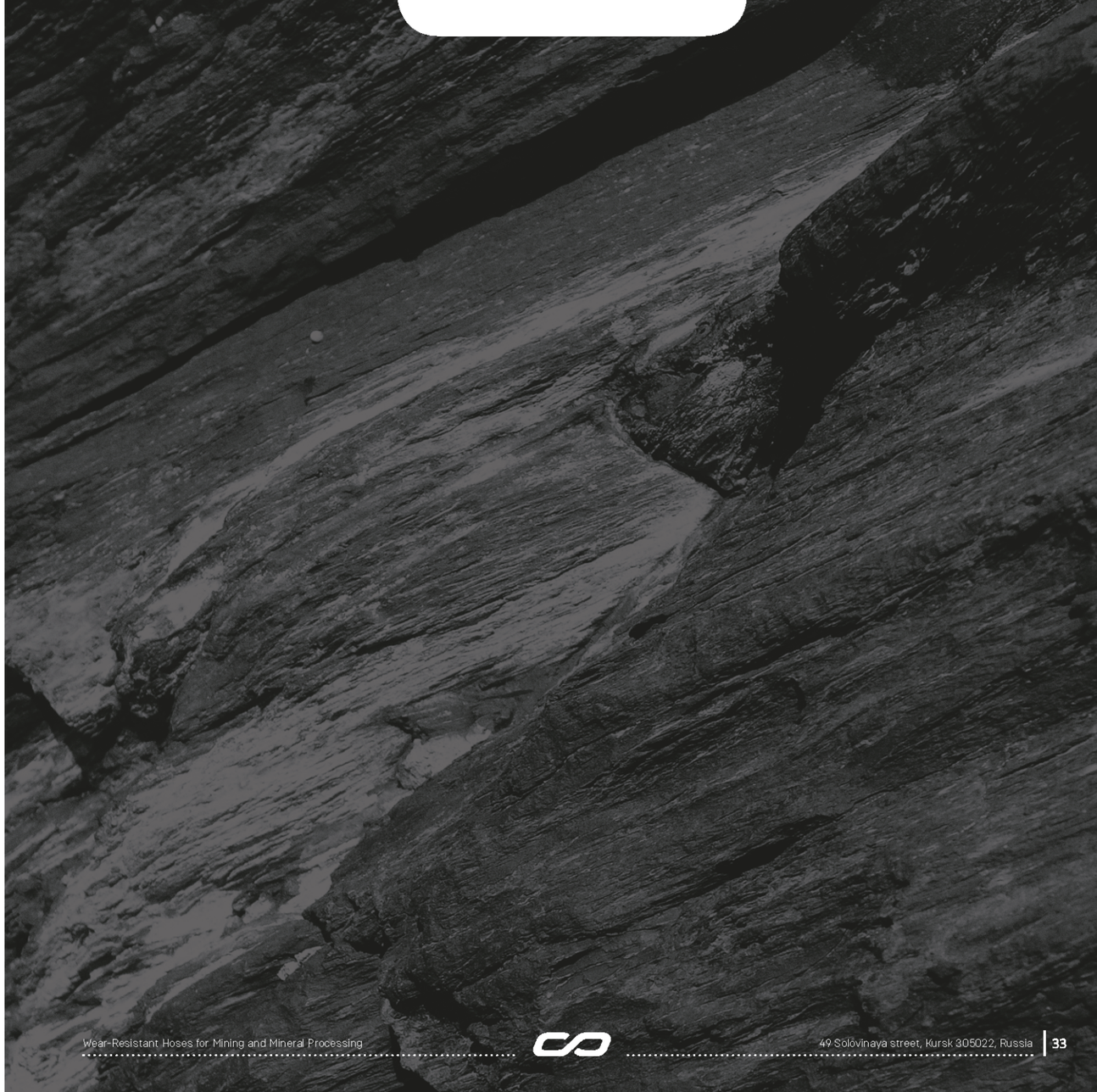

RUBBER-LINED PRODUCTS

COMPOSIT

EYMAQ

RUBBER-LINED T-SECTION

It is a pipeline system component which separates and combines fluid flows. Its design enables it to be resistant to high abrasive wear and high pressure which allows failure-free operation.

The product's metal jacket is lined with a wear-resistant rubber layer using extrusion followed by vulcanization which provides structural integrity and liner thickness.

RUBBER-LINED STEEL MANIFOLD

Combines fluid flows. As opposed to a T-section, it has more outlets providing maximum equipment performance. Unique manufacturing technology enables us to make different sizes and configurations of manifolds for various types of service.

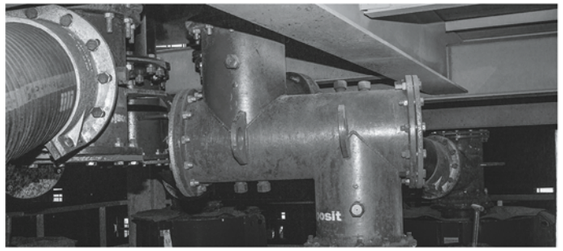

CONCENTRIC RUBBER-LINED STEEL REDUCER

Used for smooth transitions from one line diameter to another.

Due to its ability to reduce flow turbulence, wear on the hose system is also reduced, thus providing smooth operation in sections with severe abrasive wear.

Rubber lined steel reducers are manufactured with a fixed inclination of 15 degrees on either side of the axis (30 degrees in total). Custom rubber-lined reducers are also available upon Customer request.

BASIC SPECIFICATIONS: T-SECTION, MANIFOLD, REDUCER

Inside Diameter				Wear-Resistant Layer Thickness		Working Pressure		Length		Vacuum	
mm	**inch**	**mm**	**inch**	**mm**	**inch**	**MPa**	**psi**	**mm**	**ft**	**MPa**	**psi**
from 50	from 2	up to 1200	up to 40	40	up to 2	2,0	300	up to 2000	6,5	up to -0.08	-12

PRODUCT CAN BE CUSTOMIZED ACCORDING TO CUSTOMER DRAWINGS AND SPECIFICATION, INCLUDING LARGER DIAMETERS AS REQUIRED FOR SPECIFIC OPERATING CONDITIONS

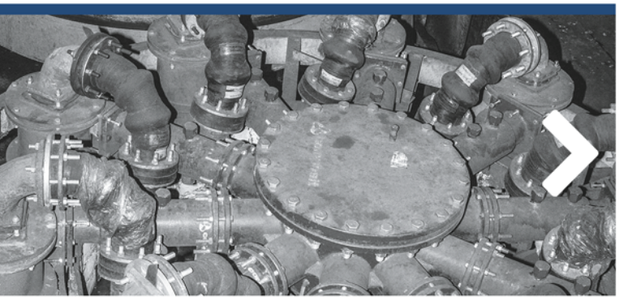

SPECIAL PIPE STUBS

DESIGNED AS COMPLEX SOLUTIONS FOR MINING AND MINERAL PROCESSING PLANTS.

A design is developed based on customer sketches and drawings, and product is manufactured that is uniquely suited to its applications.

SUCTION ASSEMBLY

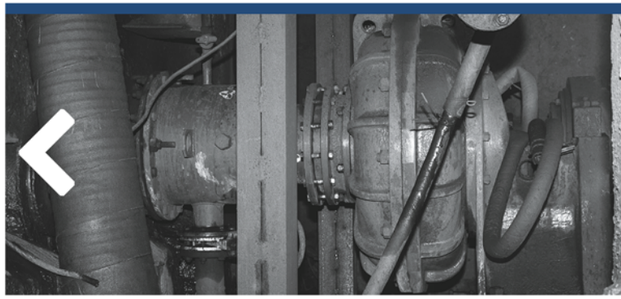

DESIGNED TO TRANSFER SLURRY IN PUMP INTAKE, SUPPLY, GRINDING, AND FLOTATION AREAS.

The principal advantage to remember is that mechanical loads are distributed to those suction assembly components that are made of steel rather than the wear-resistant rubber liner which helps to increase useful product life several-fold.

The suction assembly is comprised of rubber-lined steel products (bends, stubs, t-sections, etc.) manufactured using extrusion and subsequent vulcanization. They are used in suction and supply areas in mining and mineral processing operations to move process fluids pneumatically or hydraulically.

PRODUCT CAN BE CUSTOMIZED ACCORDING TO CUSTOMER DRAWINGS AND SPECIFICATION, INCLUDING LARGER DIAMETERS AS REQUIRED FOR SPECIFIC OPERATING CONDITIONS

LENS EXPANSION JOINTS

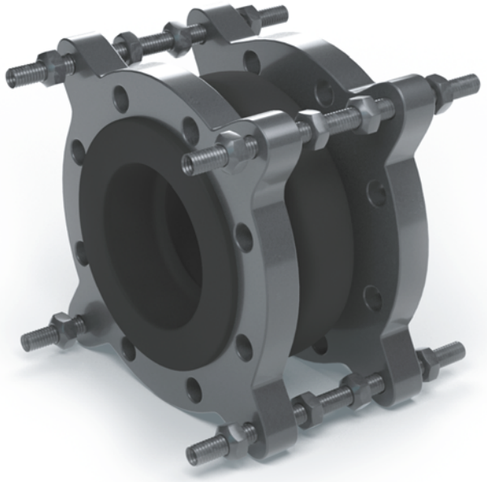

DESIGNED TO COMPENSATE FOR TEMPERATURE EXPANSION AND COMPRESSION AS WELL AS FOR HOSE MISALIGNMENT.

Lens expansion joints are made of natural or synthetic rubber for better wear resistance whereas structural capacity is provided by cord fabric.

Lens Expansion joints are equipped with swivel flanges as well as retaining studs if requested by the Customer.

EXAMPLE DESIGNATION OF LENS EXPANSION JOINT WITH INSIDE DIAMETER OF 76 MM AND LENGTH OF 150 MM, FLANGE, AND RETAINING STUD TO TRANSPORT ABRASIVE MATERIALS WITH A PARTICLE SIZE OF UP TO 2.0 MM.

LEJ-076.02.01.15
1 2 3 4 5

1. **PRODUCT ABBREVATION**
   LEJ is applied as the abbreviation for all Composit Lens expansion joints.
2. **JOINT DIAMETER**
   This part of the designation shows the joint inside diameter.
3. **FLANGE CONNECTION TYPE**
   «01»: no retaining studs
   «02»: with retaining studs
4. **ID LINER RUBBER TYPE**
   The inside wear-resistant volume is a slurry line's most important component. The type of rubber used to line the inside diameter of a hose defines an expansion joint's abrasion resistance and consequently, assures trouble-free operation of the entire section. Based on operational history, we offer two standard versions of expansion joints depending on the particle size of the transported material. In the designation, these are written as 01 and 02.

   «01»: for slurries with a particle size of up to 2.0 mm
   «02»: for slurries with a particle size of up to 10 mm
5. **LENS EXPANSION JOINT LENGTH**
   The length in the table is standard and does not change for this diameter.

www.composit.net; sales@composit.net; +7 (4712) 200-600

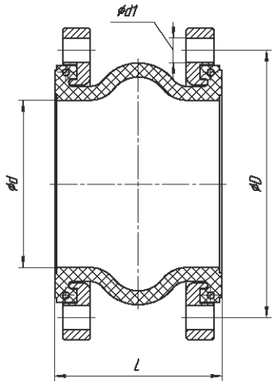

BASIC SPECIFICATIONS

Designation	Inside Diameter d		Length L		Acceptable Deflections Compression	Extension	Misalignment	Angle	Pitch Circle Diameter D	d1	n	Working Pressure	
	mm	inch	mm	ft	mm	mm	mm	deg	mm	mm	pcs	MPa	psi
LEJ-050	50	2	150	0,5	30	20	20	35	125	18	4	1.0	150
LEJ-065	65	2 5/9	150	0,5	30	20	20	35	145	18	4	1.0	150
LEJ-076	76	3	150	0,5	30	20	20	30	160	18	8	1.0	150
LEJ-102	102	4	150	0,5	30	20	20	25	180	18	8	1.0	150
LEJ-150	150	5 8/9	150	0,5	30	20	20	15	240	22	8	1.0	150
LEJ-159	159	6 1/4	180	0,6	30	20	20	15	250	22	8	1.0	150
LEJ-170	170	6 5/7	180	0,6	30	20	20	15	270	22	8	1.0	150
LEJ-200	200	7 7/8	200	0,7	30	20	20	15	295	22	8	1.0	150
LEJ-219	219	8 5/8	200	0,7	30	20	20	15	325	22	8	1.0	150
LEJ-245	245	9 5/8	200	0,7	30	20	20	10	350	22	12	1.0	150
LEJ-273	273	10 3/4	200	0,7	30	20	20	10	375	22	12	1.0	150
LEJ-300	300	11 4/5	200	0,7	30	20	20	10	430	22	12	1.0	150
LEJ-325	325	12 4/5	200	0,7	30	20	20	10	450	22	16	1.0	150
LEJ-351	351	13 5/6	200	0,7	30	20	20	10	455	22	16	1.0	150
LEJ-377	377	14 5/6	200	0,7	30	20	20	10	515	26	16	1.0	150
LEJ-402	402	15 5/6	200	0,7	30	20	20	10	550	26	16	1.0	150
LEJ-426	426	16 7/9	200	0,7	30	20	20	10	585	26	20	1.0	150
LEJ-457	457	18	200	0,7	30	20	20	10	630	26	20	1.0	150
LEJ-508	508	20	200	0,7	30	20	20	10	660	26	20	1.0	150
LEJ-530	530	20 7/8	200	0,7	30	20	20	10	710	30	20	1.0	150
LEJ-600	600	23 5/8	200	0,7	30	20	20	6	725	30	20	1.0	150
LEJ-630	630	24 4/5	200	0,7	30	20	20	6	770	30	20	1.0	150
LEJ-720	720	28 1/3	275	0,9	40	25	30	5	875	30	24	1.0	150
LEJ-820	820	32 2/7	275	0,9	40	25	30	4	950	33	24	1.0	150

PRODUCT CAN BE CUSTOMIZED ACCORDING TO CUSTOMER DRAWINGS AND SPECIFICATION, INCLUDING LARGER DIAMETERS AS REQUIRED FOR SPECIFIC OPERATING CONDITIONS

49 Solovinaya street, Kursk 305022, Russia

MULTI LENS EXPANSION JOINT

AS COMPARED TO A SINGLE EXPANSION JOINT, A MULTI LENS EXPANSION JOINT HAS A LARGER COMPRESSION AND TENSION AMPLITUDE HELPING REDUCE THE NUMBER OF SUCH JOINTS REQUIRED FOR LONG LINE SECTIONS.

It is a flexible insert made of cord fabric. The inside is made of natural or synthetic rubber.

Multi Lens Expansion joints assure trouble-free operation during large temperature variations.

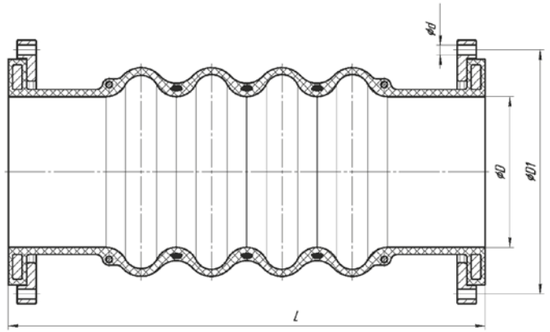

BASIC SPECIFICATIONS

Inside Diameter		Wear-Resistant Layer Thicknes		Working Pressure		Linear Extension	Linear Compression	Shift	Bending Angle
mm	**inch**	**mm**	**inch**	**MPa**	**psi**	**%**	**%**	**mm**	**deg**
up to 630	up to 24 4/5	up to 15	up to 3/5	up to 1,6	up to 240	up to 20	up to 10	up to 50	up to 20

* Product length and number of sections depend on the requirements for linear expansion and compression.

PRODUCT CAN BE CUSTOMIZED ACCORDING TO CUSTOMER DRAWINGS AND SPECIFICATION, INCLUDING LARGER DIAMETERS AS REQUIRED FOR SPECIFIC OPERATING CONDITIONS

VIBRO-JOINT

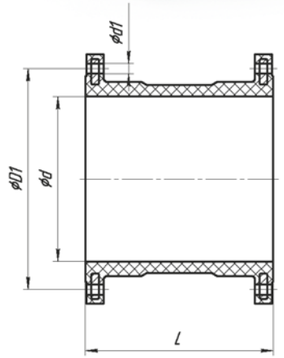

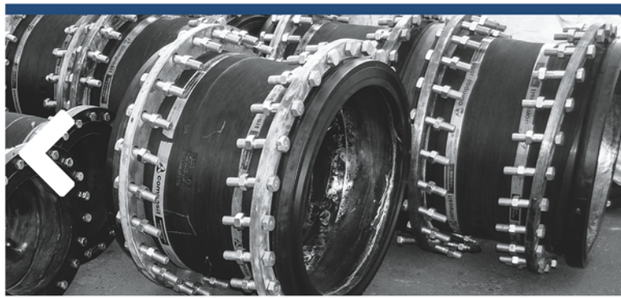

Vibro-joints are normally installed directly upstream or downstream of a pump and are used to reduce vibration in piping systems which helps reduce loads and avoid emergencies in locations where a flex hose is connected to a pump.

Vibro-joints consist of a wear-resistant inner part made of synthetic or natural rubber and a structure made of cord fabric.

Embedded or swivel flanges may be used in vibro-joint design depending on install locations and interface dimensions.

BASIC SPECIFICATIONS

Inside Diameter				Wear-Resistant Layer Thickness		Working Pressure		Test Pressure		Burst Pressure		Max Length	
mm	**inch**	**mm**	**inch**	**mm**	**inch**	**MPa**	**psi**	**MPa**	**psi**	**MPa**	**psi**	**mm**	**ft**
from 50	from 2	up to 1000	up to 24	up to 20	up to 7/9	1,0	150	1,5	225	3,0	450	up to 2000	6,5

PRODUCT CAN BE CUSTOMIZED ACCORDING TO CUSTOMER DRAWINGS AND SPECIFICATION, INCLUDING LARGER DIAMETERS AS REQUIRED FOR SPECIFIC OPERATING CONDITIONS

PINCH PIPE

PINCH PIPE (GLAND SEAL) IS DESIGNED TO REGULATE FLUID FLOW BY MEANS OF GATES OF DIFFERENT TYPES.

A pinch valve pipe is designed to seal off fluid flow when pressure is applied to it from the outside. It is made as an elastic cylindrical short pipe of synthetic or natural rubber. Pinch pipe design assures high throughput and a long service life.

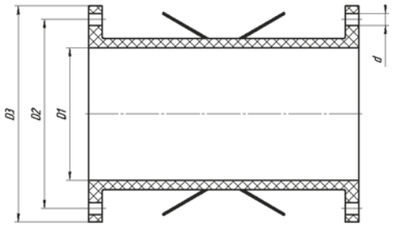

BASIC SPECIFICATIONS

Inside Diameter				Wear-Resistant Layer Thickness		Working Pressure		Test Pressure		Burst Pressure	
mm	**inch**	**mm**	**inch**	**mm**	**inch**	**MPa**	**psi**	**MPa**	**psi**	**MPa**	**psi**
from 50	from 2	up to 300	up to 11 4/5	up to 6	up to 1/4	1,0	150	1,5	225	3,0	450

PRODUCT CAN BE CUSTOMIZED ACCORDING TO CUSTOMER DRAWINGS AND SPECIFICATION, INCLUDING LARGER DIAMETERS AS REQUIRED FOR SPECIFIC OPERATING CONDITIONS

FLOATING HOSES

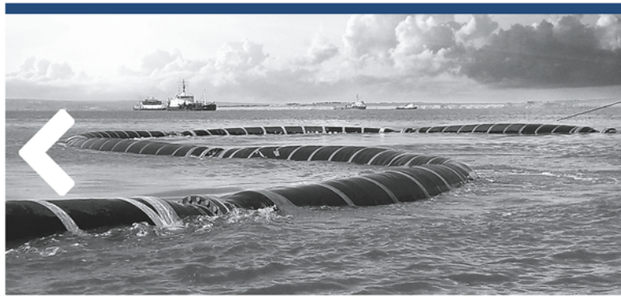

FLOATING HOSES ARE RECOMMENDED FOR USE IN TAILINGS YARDS OF MINING AND ORE UPGRADE FACILITIES.

Used to transfer abrasive slurry over water from dredger to shore. Given the capabilities of current technology, these may come complete with floats to be used by both diesel and electric dredges and may also accommodate power cables.

PRODUCT CAN BE CUSTOMIZED ACCORDING TO CUSTOMER DRAWINGS AND SPECIFICATION, INCLUDING LARGER DIAMETERS AS REQUIRED FOR SPECIFIC OPERATING CONDITIONS

JOINTS
COMPOSIT

DEPENDING ON OPERATIONAL CONDITIONS EMBEDDED, SWIVEL, COUNTER, ADAPTER JOINTS AS WELL AS MOUNTING FLANGES AND COUPLINGS MAY BE USED.

EYMAQ

COUPLING JOINT

DEPENDING ON OPERATIONAL CONDITIONS, WE CAN PROVIDE YOUR HOSES WITH EMBEDDED, ROTATABLE, COUNTER, ADAPTER, MOUNTING FLANGES AND COUPLINGS.

A **COUPLING JOINT** CONSISTS OF A COUPLING AND A SEAL RING PROVIDING A SEAL AND A RELIABLE CONNECTION

FLANGED CONNECTIONS

EMBEDDED FLANGE

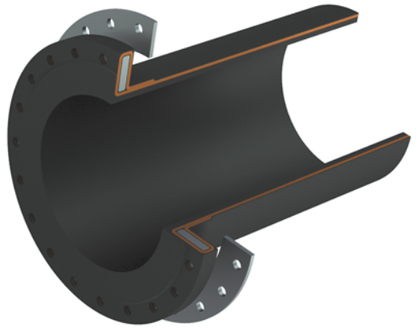

EMBEDDED FLANGE IS A RUBBER-LINED STEEL FLANGE COMPONENT WHICH IS BUILT INTO THE HOSE.

SWIVEL FLANGE

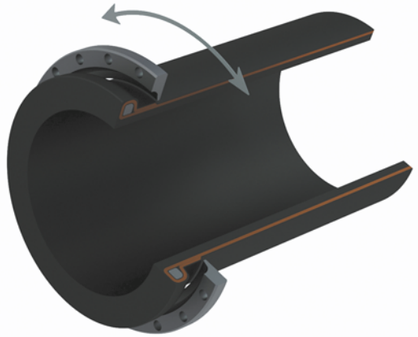

STEEL SWIVEL FLANGE IS SEPARATE FROM THE HOSE MAKING FOR EASY ASSEMBLY AND DISASSEMBLY.

FLANGED CONNECTION FOR EASY INSTALLATION

COUNTER FLANGE

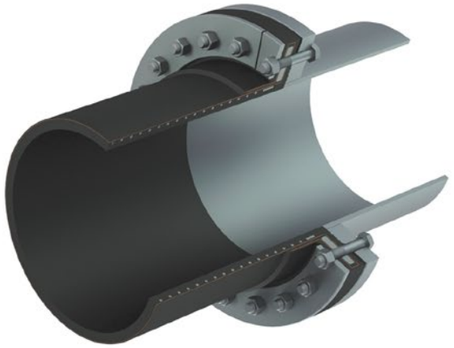

COUNTER FLANGES ARE DESIGNED EASILY TO CONNECT RUBBER HOSES TO STEEL PIPES.

ADAPTER FLANGE

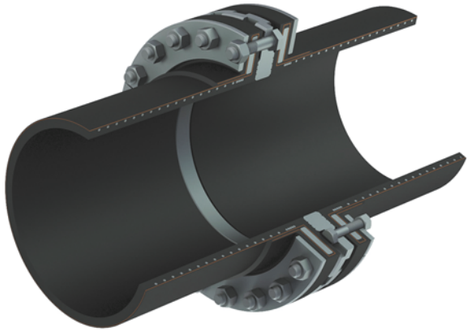

ADAPTER FLANGE IS USED WHEREVER RUBBER HOSES ARE TO BE CONNECTED WITH PIPES OF OTHER TYPES OR OTHER EQUIPMENT WITH DIFFERENT PITCHEF CICLE FIAMETRES.

MOUNTING FLANGE

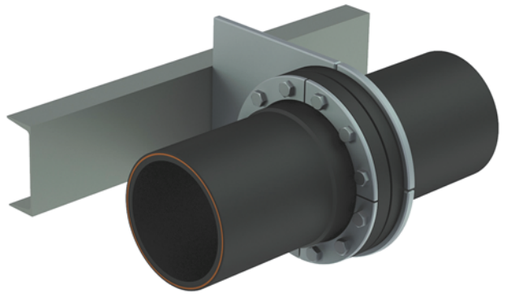

MOUNTING FLANGE IS USED FOR HOSE ASSEMBLY AND HELPS SECURE A RUBBER HOSE TO SURROUNDING SUPPORTING METAL STRUCTURES.

EYMAQ

COMPOSIT